Ersatzteillisten VS20 / Spare parts lists

Auftragsnummer / Order **205756**
Maschinennummer / Machine number **127194**
Baujahr / Year of construction **2008**

Baugrupppe	Part group	Identnummer Part number
Umlenkrad Auslauf MS/BS	Deflexion pulley runout	112548
Kettenspannsegment	Chain tensioner cpl.	103543
Antrieb FU	Frequency drive FU	112192
Antriebswelle kpl	Drive shaft cpl	101731
Einlaufrolle kpl	Film infeed roller cpl	114460
Laufrolle kpl	Infeed roller cpl	115292
Formstation 320	Moulding die set	114560
Vakuumstation 320	Vacuum die set	114561
Hubstation 320	Stroking device	113872
Endschaltersatz Hubstation	Dead zone control - stroking device	114821
Rollenlagerung unten 320	Bottom roller system	122411
Rollenführung unten 285-355	Bottom roller guide	122414
Rollenaufnahme unten 285-355	Bottom roller holding	122415
Rollenlagerung oben 285-355	Top roller system	122435
Rollenführung oben 285-355	Top roller guide	122439
Rollenaufnahme oben 285-355	Top roller holding	122436
Schwinge 285-355	Tumbler lever	122433
Umlenkrolle oben 285-355	Top roller	115142
Haube VST/LS 320 kpl.	Cover	114805
Schutz Formstation	Protection cover moulding point	127357
Schutz Umlenkachse	Safeguard-top film infeed	118887
Pumpenanschluss 40/63/100m³/h	Pump connection	124804
Pneumatik Formventil HL	Pneumatic forming valve HL	116566
Pneumatik Evakuierventil HL	Pneumatic evacuation valve HL	116567
Pneumatik Grundpaket	Pneumatic basicpack	114690
Pneumatik Siegelventil	Pneumatic valve for sealing	116215
Pneumatik Anpreßventil	Pneumatic valve for film pressing	116218
Kühlung FK / VK	Cooling FK+VKD	100220
Begasung Up VS	Gas flushing unit VS	120112
Sicherheitsschieber 320	Safety slide	114667
Pneumatik Sicherheitsschieber	Pneumatic Safety slide	115044
Stütztisch 320	Supporting plate	102764
Querschneidung horiz 320	Crosscutting system	113682
Teilesatz QS horiz	Spareparts cross cutting system	113664
Eckenstanze 320 kpl.	Punching system	054427
Querhaupt 320 kpl.	crosshead cpl.	120735
Schnittsatz EST 320-2	Cutting unit punching system	114898
Längsschneidhalter 320	Straightcutting holder	106612
Längsschneidwelle 320	Longitudin cutting shaft	039318
Längsschneidwelle 320-2	Straightcutting shaft	039320
Auslaufrutsche	Discharge chute	127392
Auslauftunnel 320 m. Wippe	Discharge cover with hinged plate	113728
Aufwickler für Streifen 320	Rewinder	116355
Aufwickler Vormontage	Rewinder pre assembly	107006
PA-Aufnahme	Package support holding fixture	111795
Formstation 320	Moulding station	n/a
Vakuumstation 320	Vacuum station	n/a
Elektrik	Electrical parts	n/a

Spare parts list for VS20

Baugruppe:	**Deflexion pulley runout MS/BS**	112548

Pos.	Artikelnr.	Bezeichnung
1	101716	Clambing mount (deflexion pulley)
2	112219	Bearing bolt (deflexion pulley)
3	39277	Retaining ring for shafts 25x1,2
4	111100	Roller for mount
5	84304	Film clamp cone
6	35364	Grooved ball-bearing 6005.2RS
7	54763	Hex head screw M 8 x 120
8	15829	Washer A 8.4, A2, DIN125
9	57131	Self-locking hex nut M 8
10	63205	Pin 10(m6)x 30

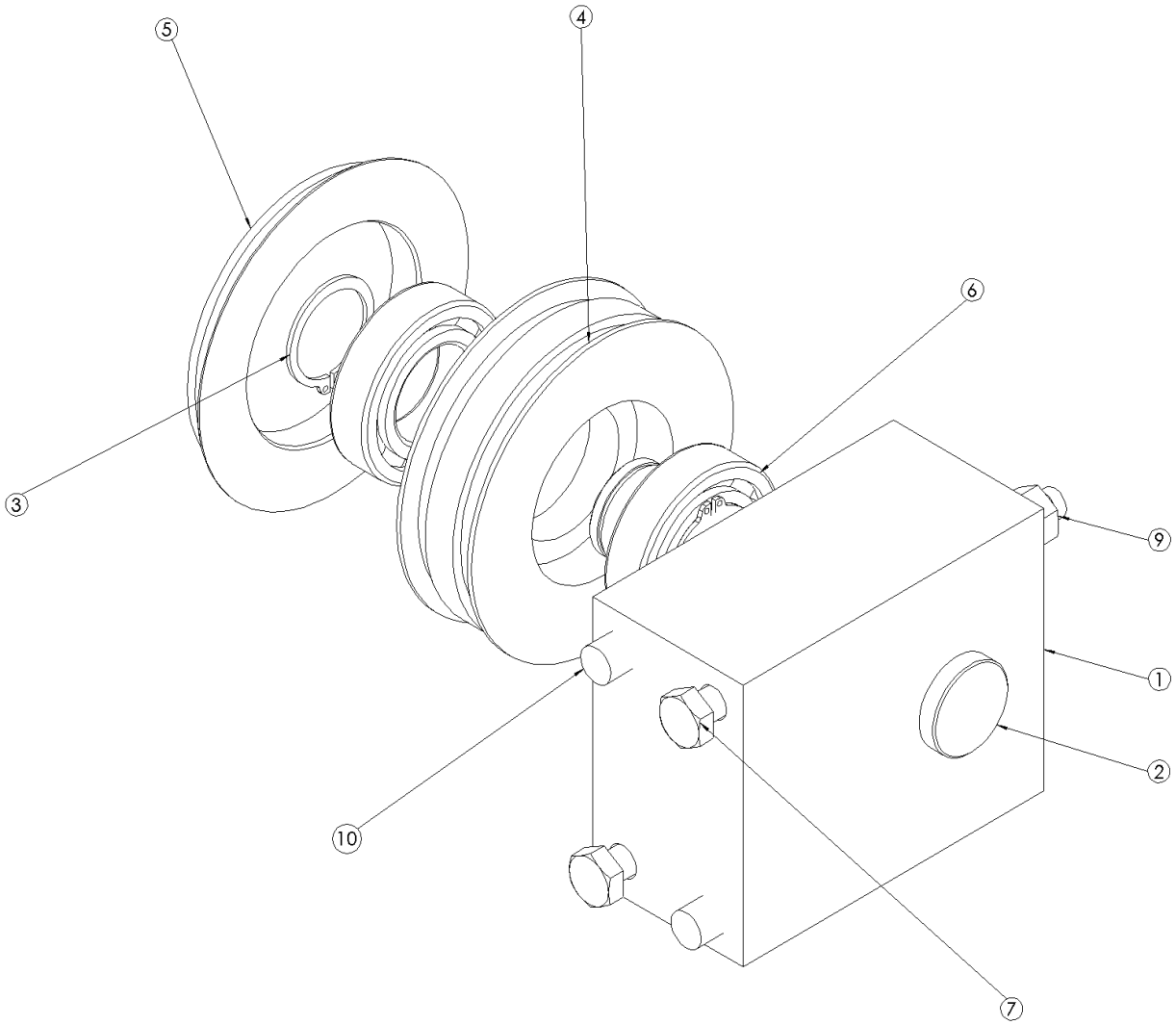

Spare parts list for VS20

Baugruppe:	**Chain tensioner cpl.**	103543

Pos.	Artikelnr.	Bezeichnung
1	103329	Set of chain tensioner
		Right + left tensioner
3	114757	Sliding shoe
4	15828	Hex socket head screw M 8x 40
5	54024	Hex head screw M 8 x 80
6	15875	Hex nut M 8
7	62460	Hex cap nut M 8

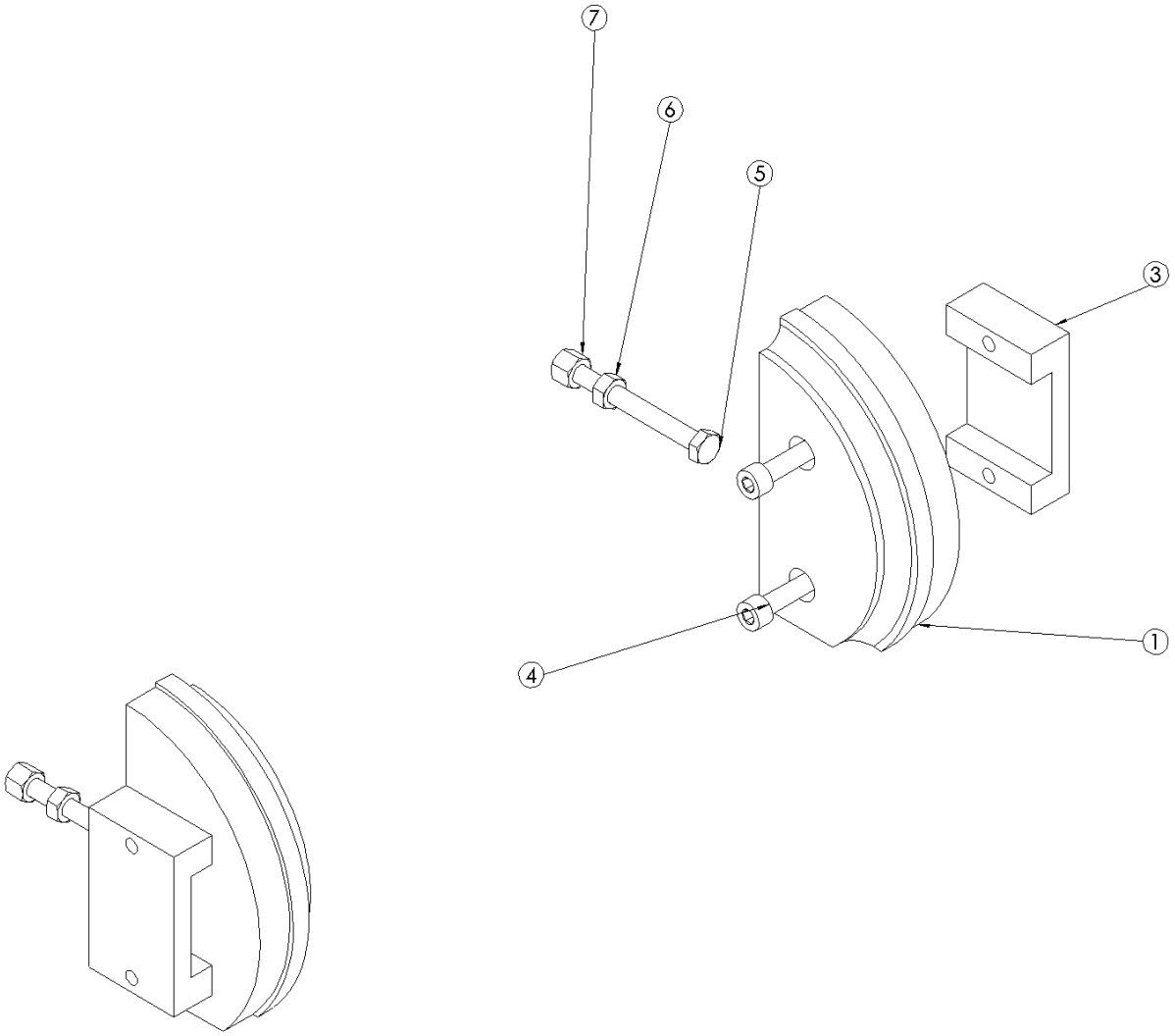

Spare parts list for VS20

Baugruppe:	**Frequency drive FU 0,55kW**	112192

Pos.	Artikelnr.	Bezeichnung
10	109493	Helical geared motor GSS04-2M SAR 080-12
20	109718	Frequency converter E82EV751K2C
30	109719	Operating module Keypad E82ZBC
40	109743	Operating module-I/O
50	16353	Hex head screw M 8 x 35
60	67933	Hex.socket countersunk screw M 8x 35
70	15829	Washer A 8.4
80	57131	Hex nut- self locking M 8
90	65083	Hex head screw M 6 x 35
100	78225	Hex nut M 6
110	103630	Incremental encoder plate
120	78424	Impulse coder BHF 16.24K 500-12-5
130	16559	Hex head screw M 4 x 10
140	15863	Washer A 4.3

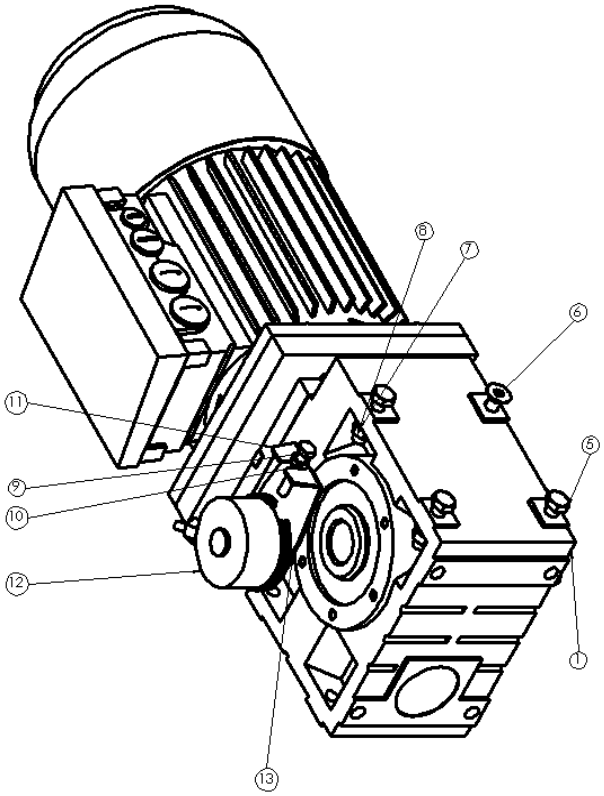

Spare parts list for VS20

Baugruppe:	**Drive shaft 320 kpl**	101731

Pos.	Artikelnr.	Bezeichnung
10	101707	Bearing block for drive shaft
20	54763	Hex head screw M 8 x 120
30	15829	Washer A 8.4, A2, DIN125
40	15875	Hex nut M 8
50	101732	Drive shaft 320 VSXX
60	84434	Feather kex A 8 x 7 x 28
70	84416	Sprocket wheel 1-f. 5/8" z18 D=25
80	36091	Hex socket set screw M 6x10
90	15922	Hex socket head screw M 4x 10

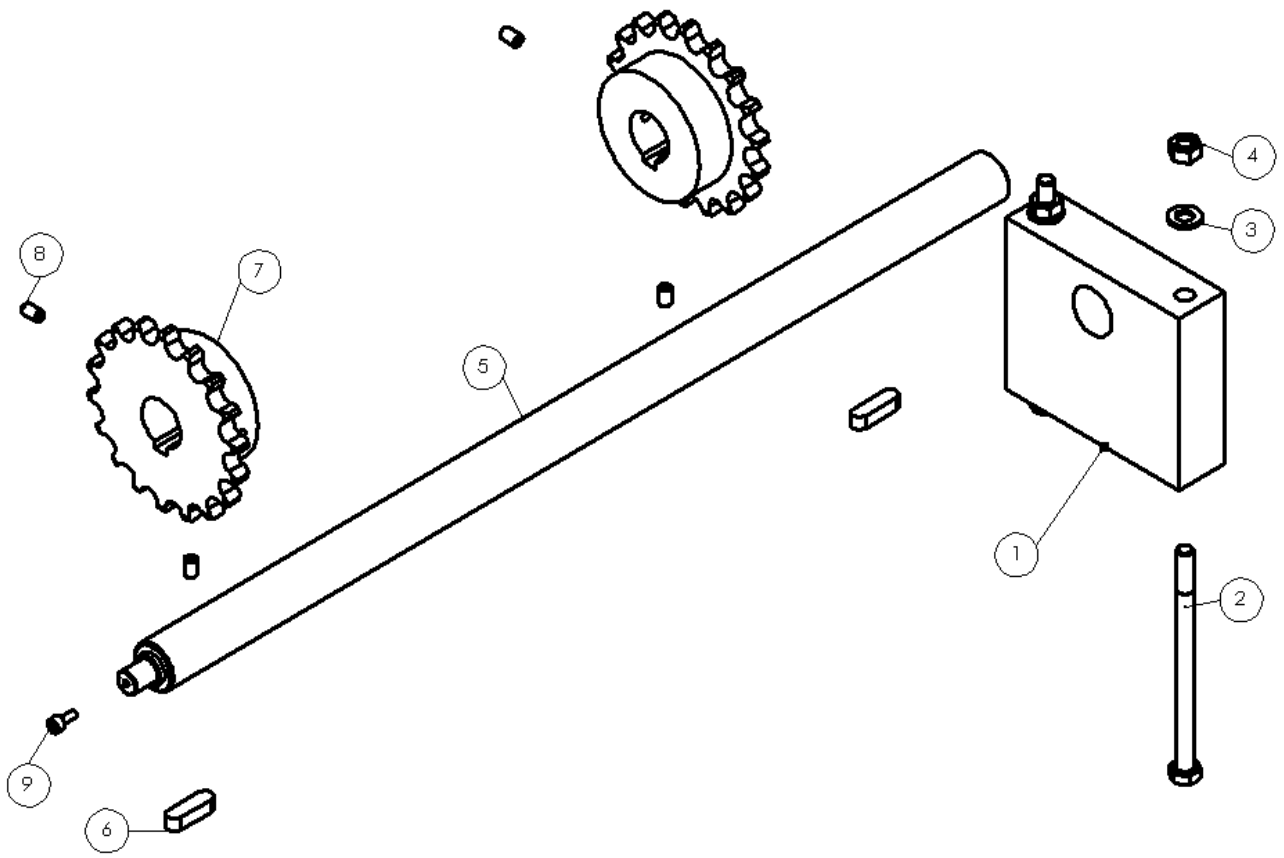

Spare parts list for VS20

Baugruppe:	**Film infeed roller 320 cpl**	114460

Pos.	Artikelnr.	Bezeichnung
10	113697	Axle 320
20	115292	Infeed roller 320 cpl
30	127289	Shim ring NA
40	39277	Retaining ring 25x 1,2
50	84304	Film clamp cone VS
60	43534	Compression spring (Niro)
70	102733	Infeed roller
80	15907	Washer A 6.4, A2
90	15927	Hex nut M 6,
100	35364	Grooved ball bearing 6005.2RS
110	114456	Pillow block for film infeed left
120	115670	Pillow block for film infeed right
130	54763	Hex head screw M 8 x 120
140	15829	Washer A 8.4, A2
150	15875	Hex nut M 8

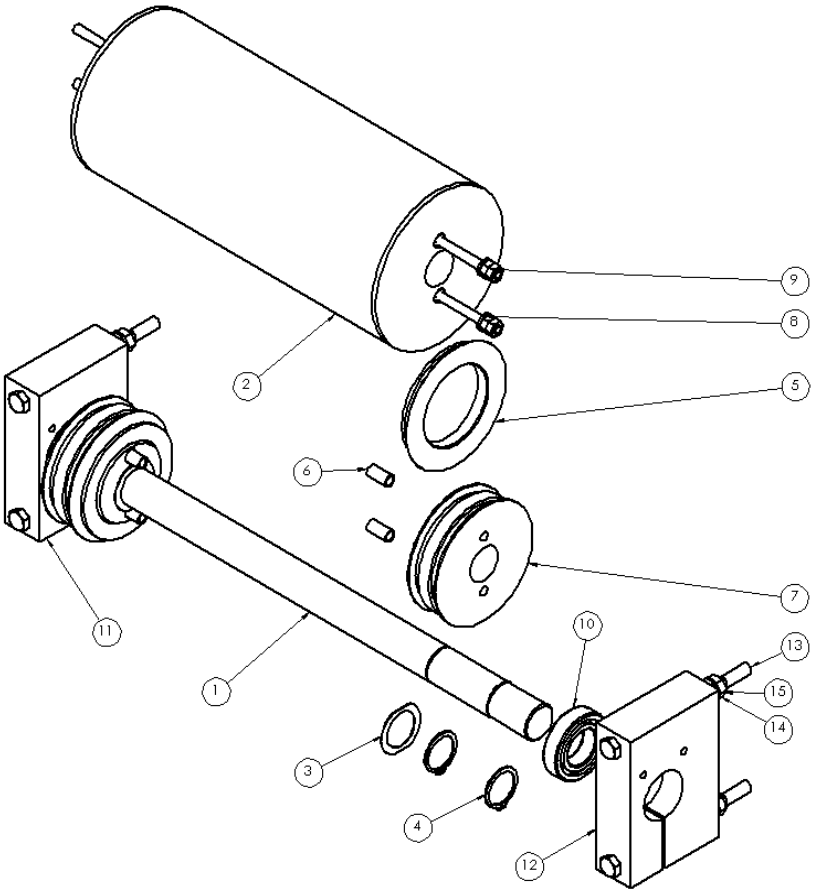

Spare parts list for VS20

Baugruppe:	**Infeed roller 320 cpl**	115292

Pos.	Artikelnr.	Bezeichnung
10	84301	Infeed roller 320
20	102732	Collar bearing for infeed roller
30	15907	Washer A6,4 A2
40	113204	Hex head screw M 6 x 80

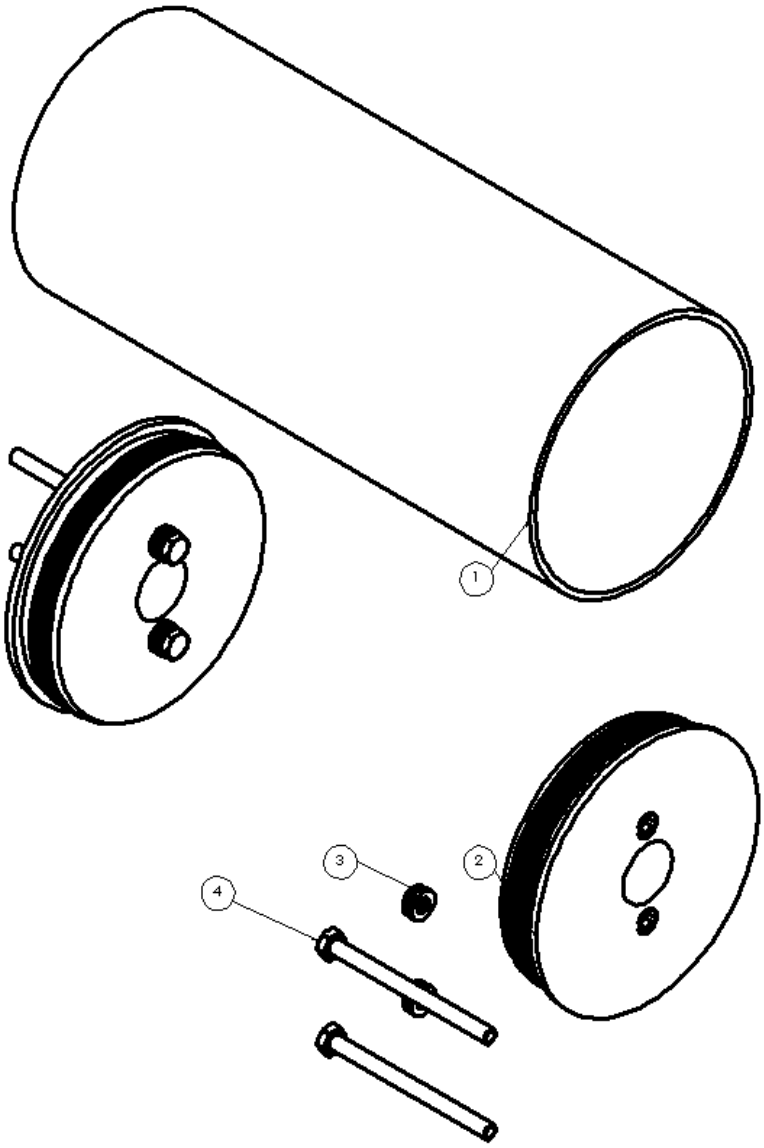

Spare parts list for VS20

Baugruppe:	**Moulding point 320-150 4KN**	114560

Pos.	Artikelnr.	Bezeichnung	marked with
1	113872	Moulding point 320-150 4KN	
2	84437	Clamping plate MS/BS	
4	84453	Sprocket block MS FST	
4	114383	Sprocket block MS FST	
5	84454	Sprocket block BS FST	
5	114384	Sprocket block BS FST	
7	45312	Screwde straigh connection 10 R 1/4#	
8	17509	Slotted spring pin 6 x 40	
9	13989	O-Ring	
11	36101	Slotted spring pin 6 x 20	
12	47518	Screwed joint (packed) HSK-K16	
13	29089	Female plug (old version)	
13	111370	Female plug (new version since Masch.Nr. 103133)	
20	73491	Loctite 243	

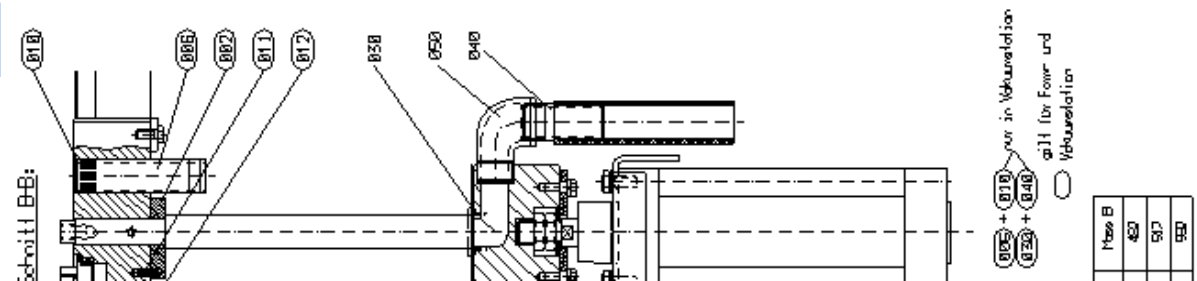

Spare parts list for VS20

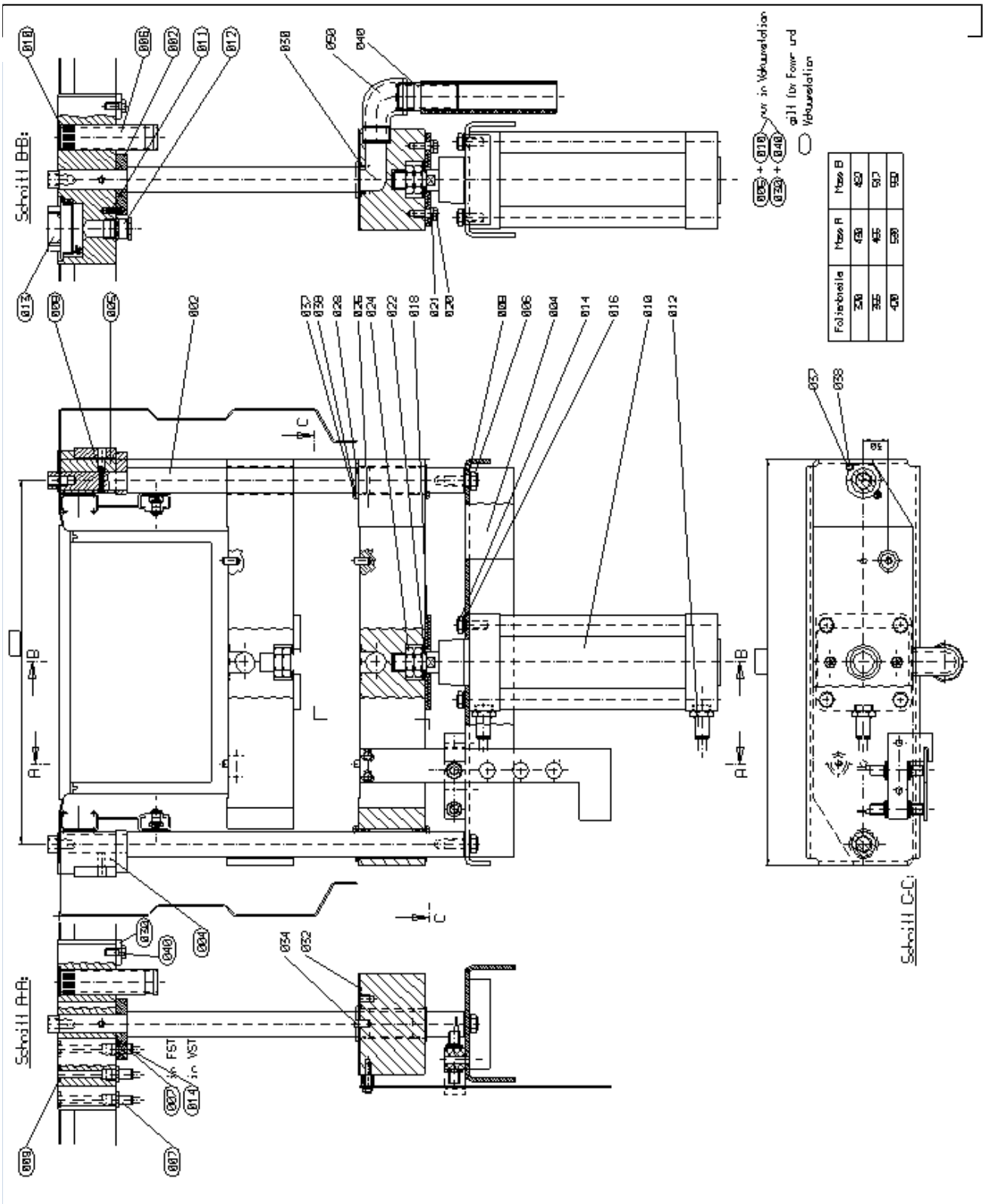

Spare parts list for VS20

Baugruppe:	**Vacuum sealing point 320-150 4KN**	114561

Pos.	Artikelnr.	Bezeichnung	marked with
1	113872	Elevating station 320-150 4KN	
2	84437	Clamping plate MS/BS	
4	84455	Sprocket block MS VST	
5	84456	Srpocket block BS VST	
6	84457	Nozzle LW 30	
7	45312	Screwde straight connection 10 R 1/4#	
8	17509	Slotted spring pin 6 x 40	
9	13989	O-Ring	
10	29122	O-Ring	
11	36101	Slotted spring pin 6 x 20	
12	47518	Screwde joint HSK-K16	
13	29089	Female plug	
13	111370	Female plug (new version since Masch.Nr. 103133)	
14	45202	Screwed straight connection 8 R 1/4#	
20	73491	Screw locking	
30	112106	Adjustable block 3	
40	17253	Hex.head screw	

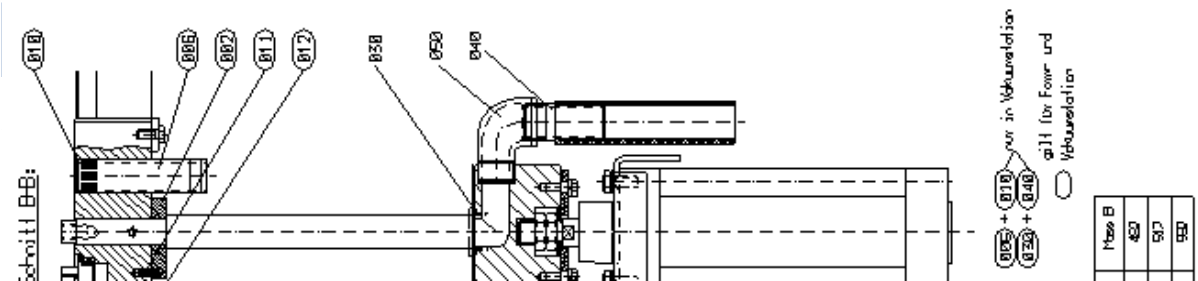

Spare parts list for VS20

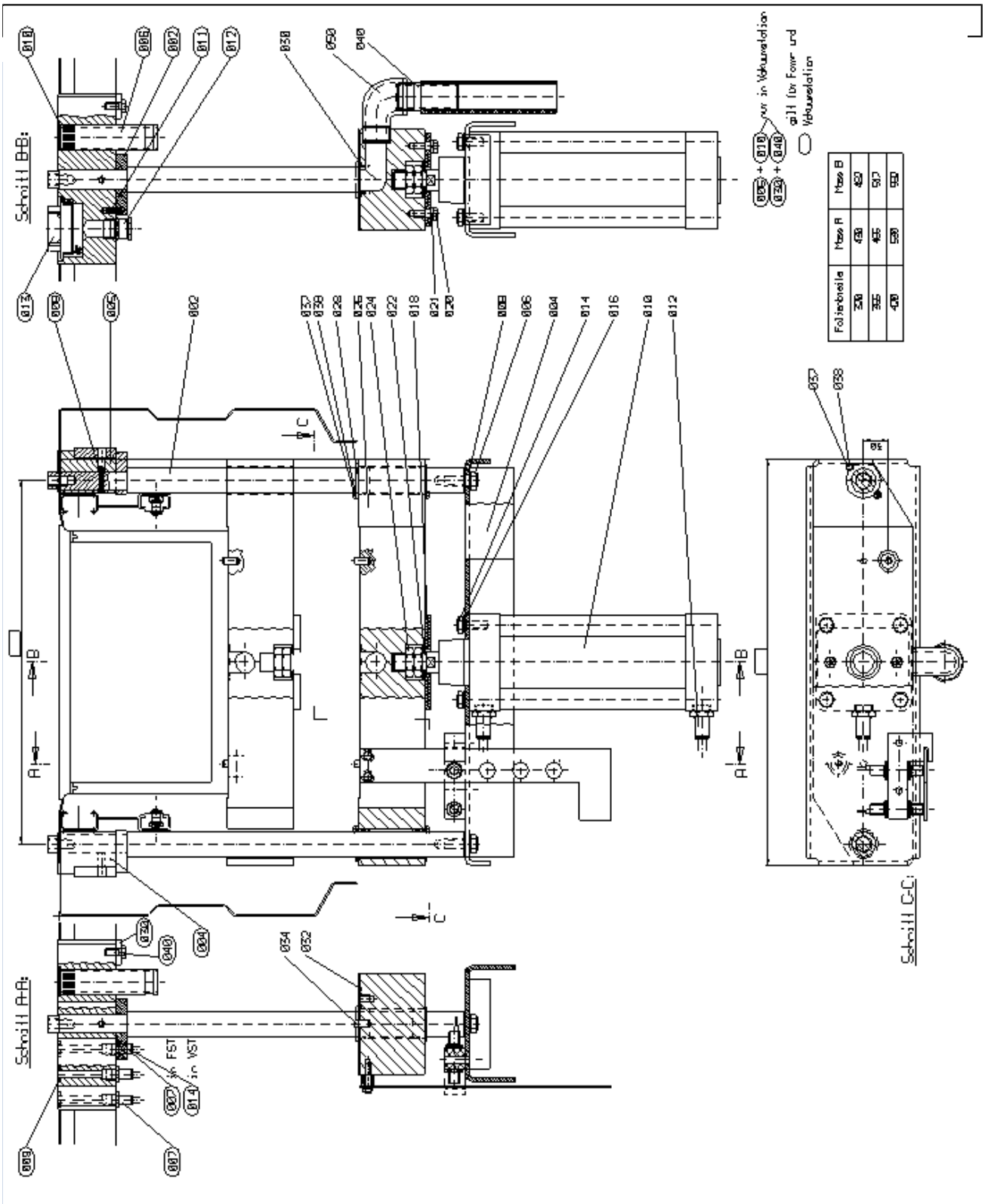

Spare parts list for VS20

Baugruppe:	**Stroking device 320-150 4KN**	113872

Pos.	Artikelnr.	Bezeichnung
2	81874	Guide column
4	114828	Cylinder traverse 320
6	54773	Hex.head screw
8	15900	Washer
10	77620	Cylinder
	36166	Wearing parts kit
12	45311	Screwed straight connection
14	16007	Hex.head screw
16	15908	Washer
18	113873	Flange
20	17253	Hex.head screw
21	15893	Lock washer
22	34055	Plate spring
24	82342	Hex nut
26	113875	Chamber beam
28	100030	Slide bearing
30	13986	O-Ring
32	13993	O-Ring
34	35818	Pin
36	18045	Loctite Kleber 601
37	16559	Hex.head screw
38	15863	Washer
40	84583	Connection fitting
50	113877	Angle

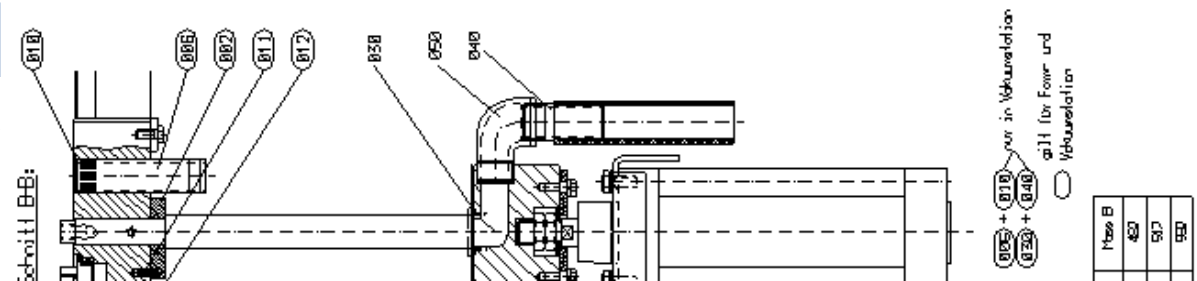

Spare parts list for VS20

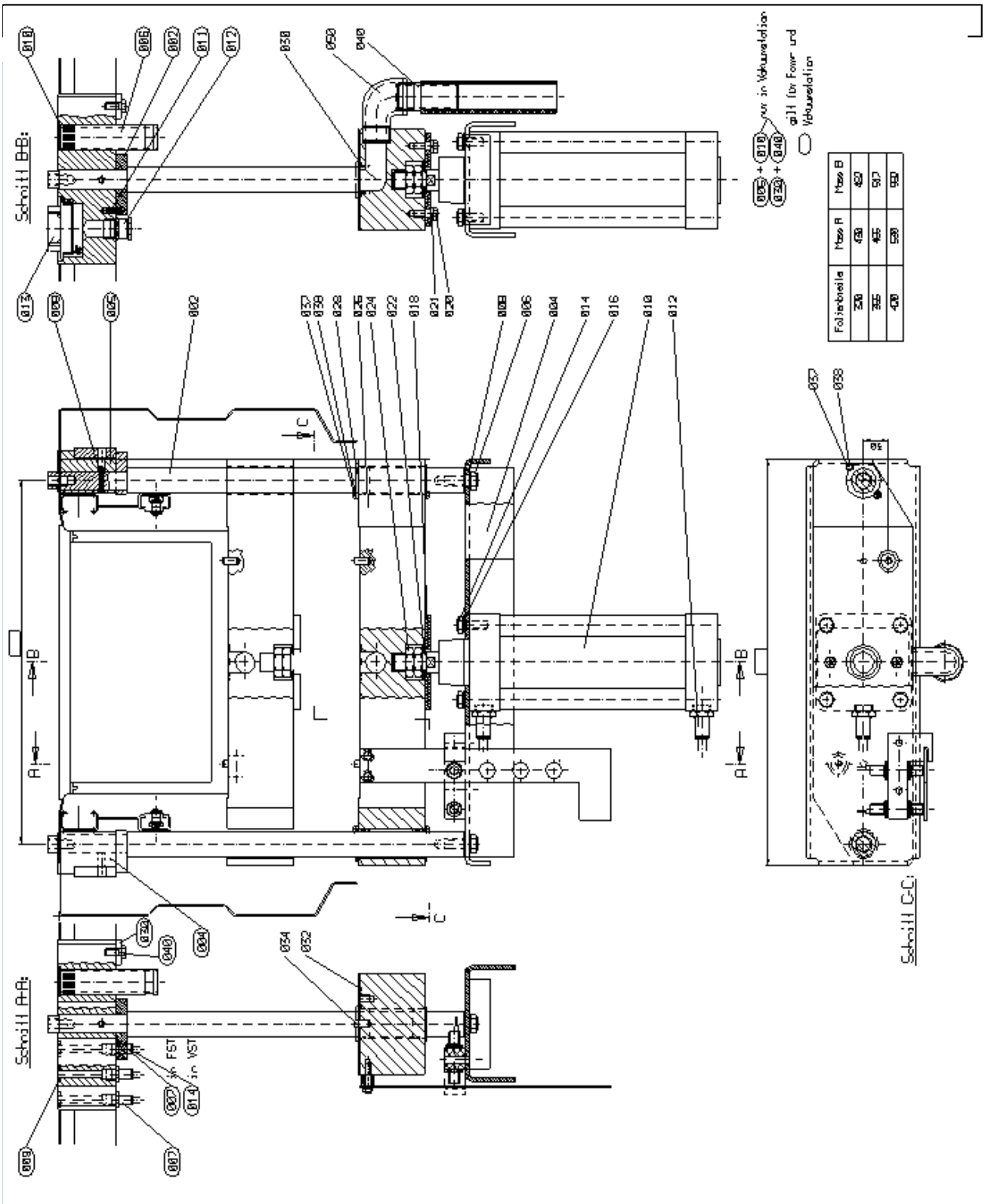

Spare parts list for VS20

Baugruppe:	**Limit switch elevator unit**	114821

Pos.	Artikelnr.	Bezeichnung
56	16560	Hex head screw
57	107474	Proximity switchSA4mm
57	116345	Proximity switchSA4mm
58	57131	Hex nut- self locking
60	114845	Indicator
61	115745	Distance D= 15 L= 13.0 d= 6.6
62	65083	Hex head screw
70	114841	Mount for limit switch

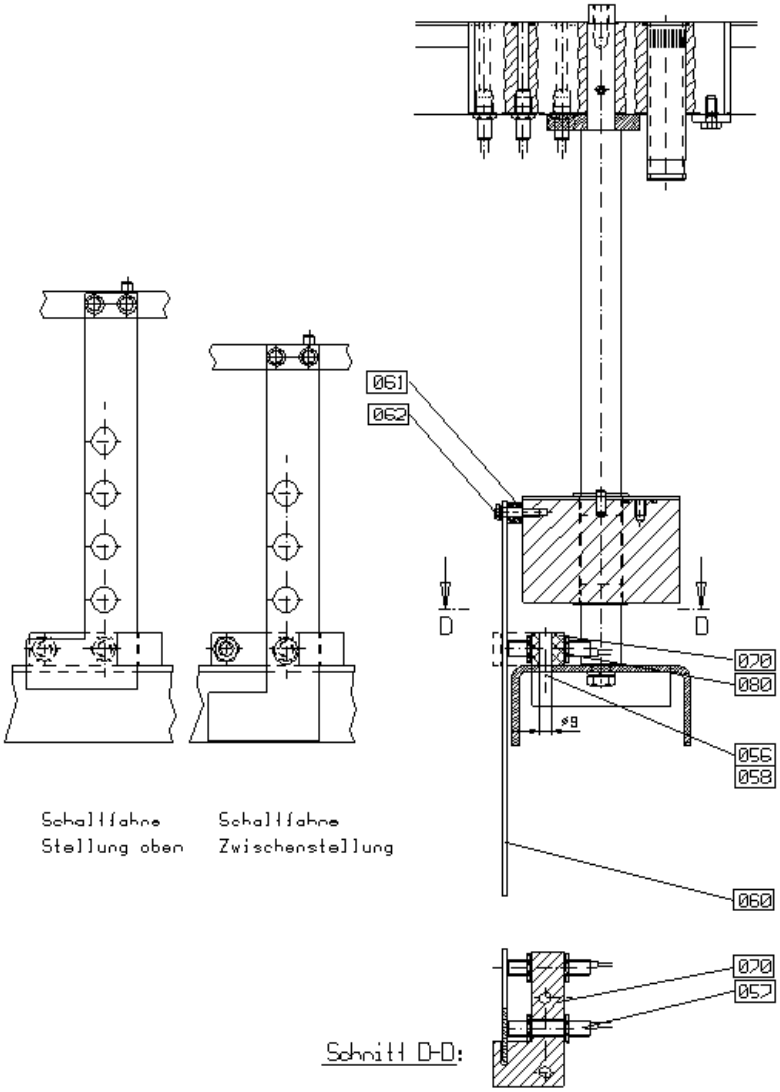

Spare parts list for VS20

Baugruppe:	**Bottom roller system 320**	122411

Pos.	Artikelnr.	Bezeichnung
10	122414	Roller guide 355
20	122415	Film mandrel 285-355
30	34196	Tension spring
40	82467	Spring holder

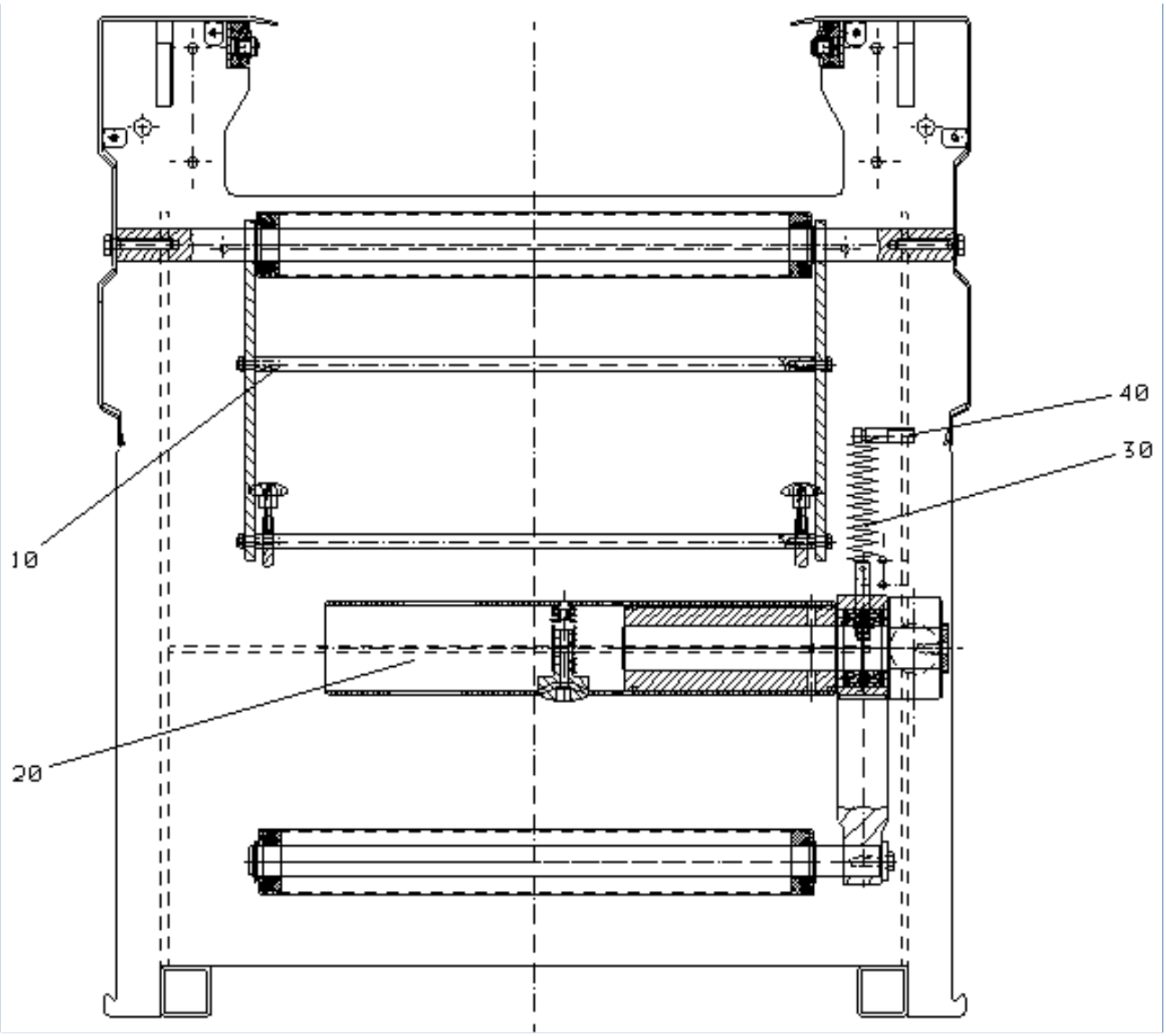

Spare parts list for VS20

Baugruppe:	**Roller system down 320**	122414

Pos.	Artikelnr.	Bezeichnung
10	122421	Distance D=12 / L= 382,8 (M6)
20	111391	Set collar
30	24749	Star screw
40	111553	Border fixed guidance
50	41681	Hex.head screw M6 x 20
60	15907	Washer A 6.4, A2, DIN125
70	100436	Collar bearing for tail
80	122423	Tail 285-355
90	39277	Retaining ring
100	18039	Screw locking HF270
110	122434	axel roller system down
120	34203	Hex.head screw M8 x 45
130	15893	Lock washer B 8, A2, DIN127

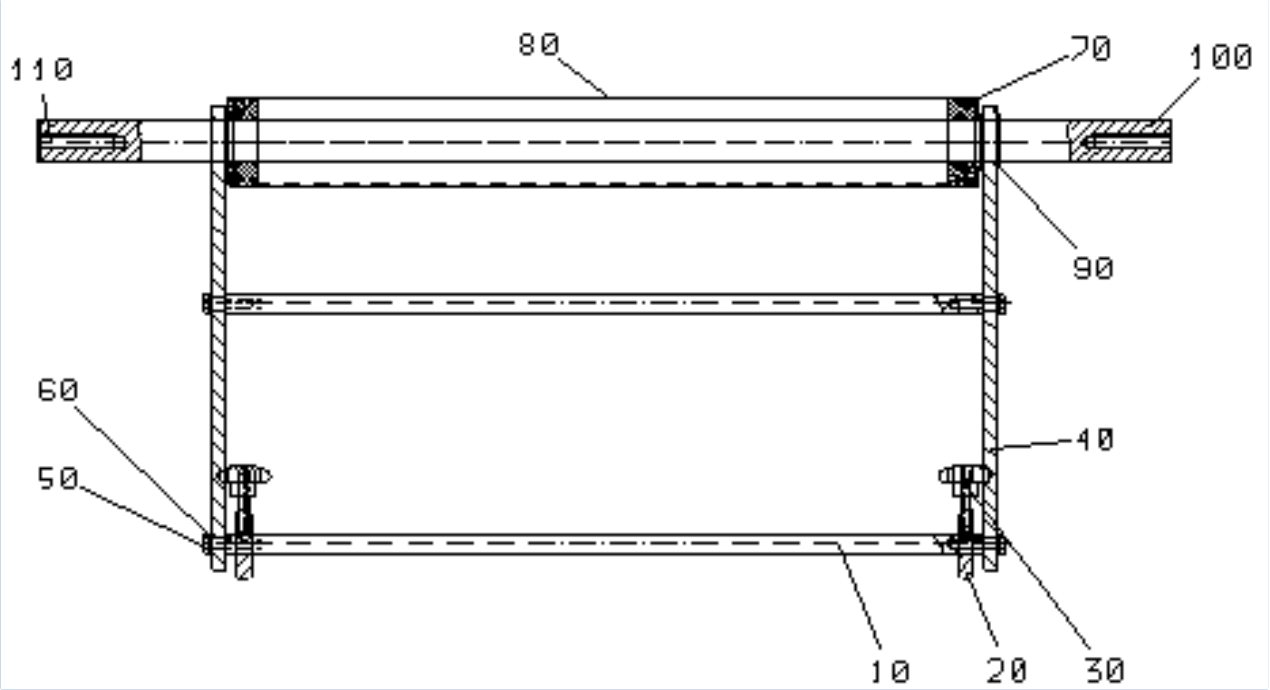

Spare parts list for VS20

Baugruppe:	**Bottom roller holding 355**	122415

Pos.	Artikelnr.	Bezeichnung
10	82437	Axel bottom
20	77834	Distance D= 40 L= 4.0
30	54761	Hex.head screw M8 x 16
40	82441	Distance D= 49 L= 7.0
50	77868	V-Seal-Ring
60	122433	Rocker arm 374-420 kpl
70	82439	Bush
80	14009	O-Ring seal
90	17509	Slotted spring pin 6 x 40
100	82442	Film mandrel 374-420
110	49796	Rivet nut
120	15438	Compression spring
130	82438	Bremsstück
140	15930	Hex.head screw M6 x 60
150	82463	Protection cap TL 2-243
160	112443	Spring bolt
170	15929	Hex.socket head screw
180	57129	Hex.nut -self locking M5

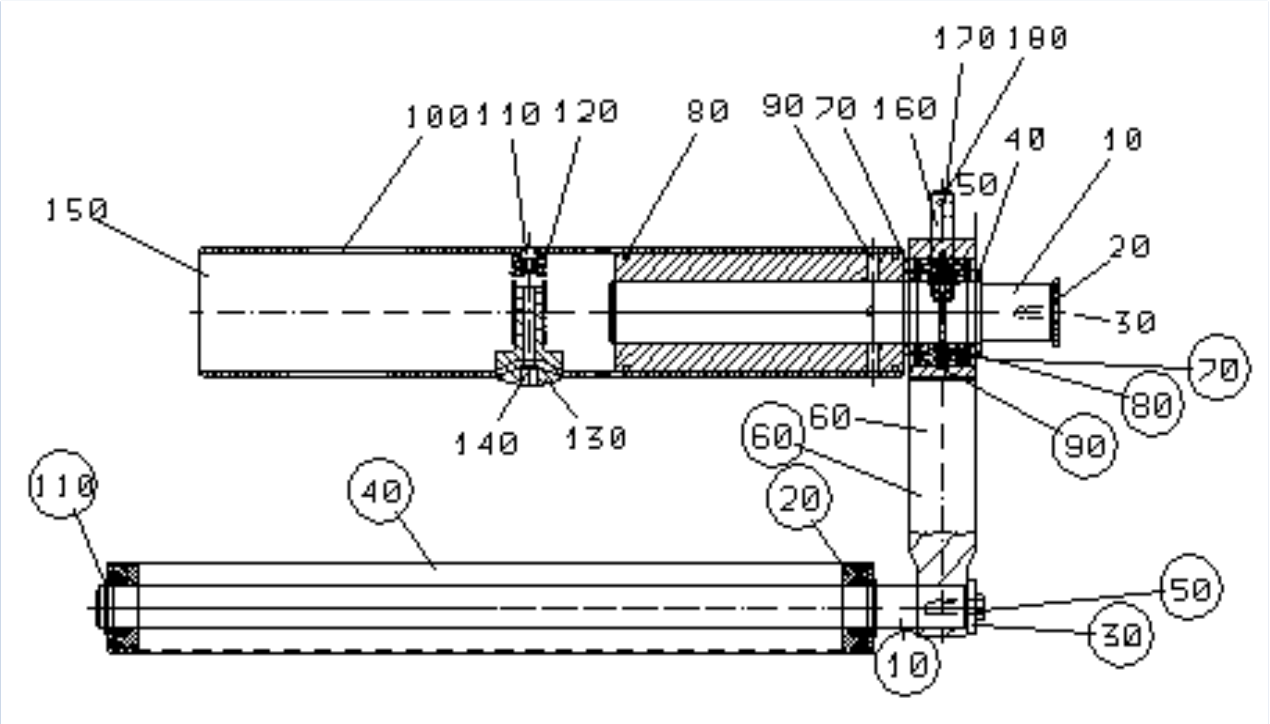

Spare parts list for VS20

Baugruppe:	**Top Roller system 285-355**	122435

Pos.	Artikelnr.	Bezeichnung
10	122436	Film mandrel
20	100725	Strap for roller support
30	34196	Tension spring
40	122439	Roller guide

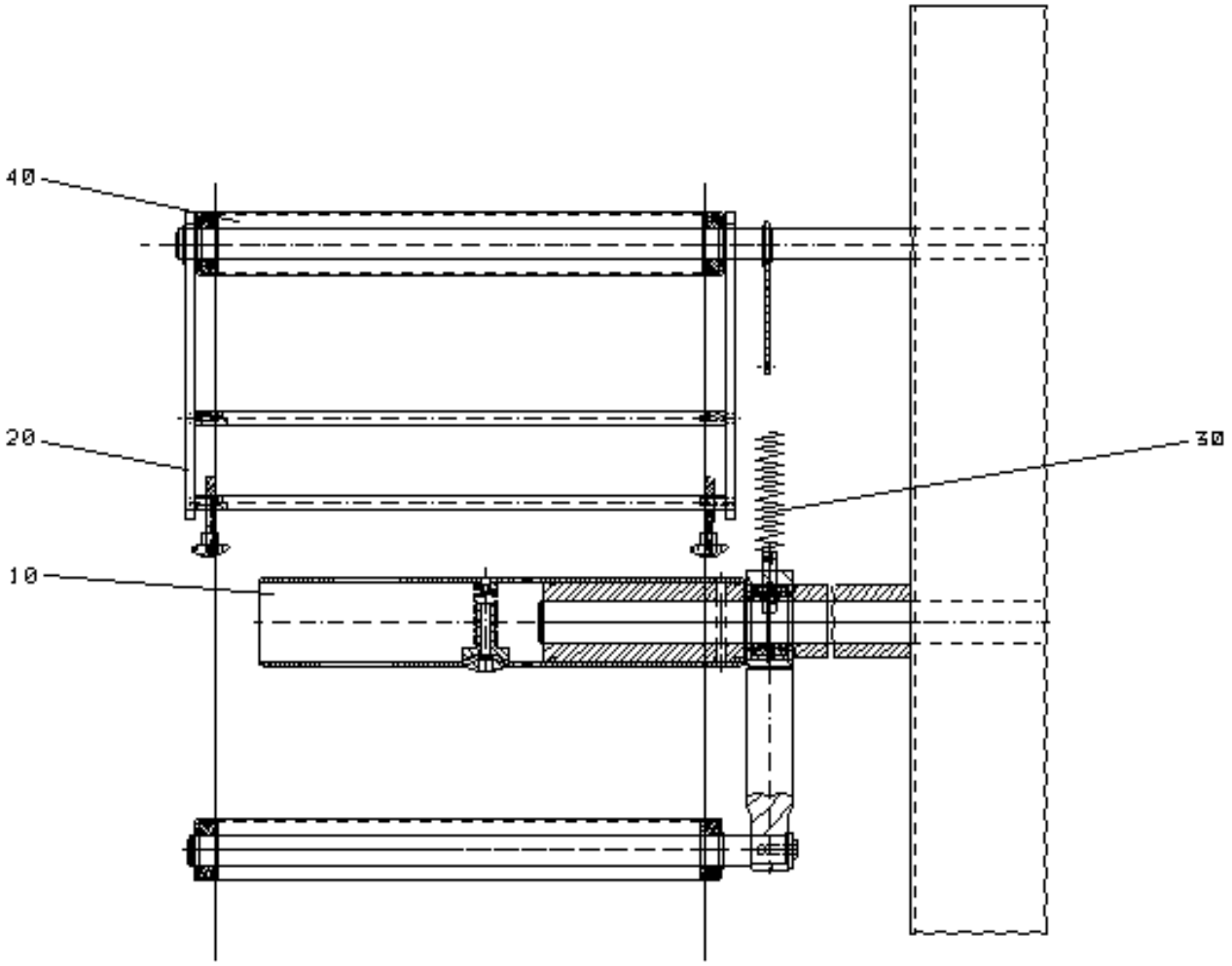

Spare parts list for VS20

Baugruppe:	**Top roller guide 285-355 kpl**	122439

Pos.	Artikelnr.	Bezeichnung
10	111681	Border fixed guidance MS
20	122421	Distance D=12 / 382,8
30	15907	Washer A 6.4, A2,
40	41681	Hex. Head screw M6
50	112195	Set collar D40 x 8
60	24749	Star screw
70	100436	Collar bearing for tail
80	122423	Tail 285-355
90	122438	Axle 25h9x788
100	112388	Retaining ring
110	62423	Slide bearing Iglidur
120	102125	Mount
130	102126	Mount
140	54760	Hex socket head screw M 8x 12
150	41681	Hex socket head screw M 6 x20

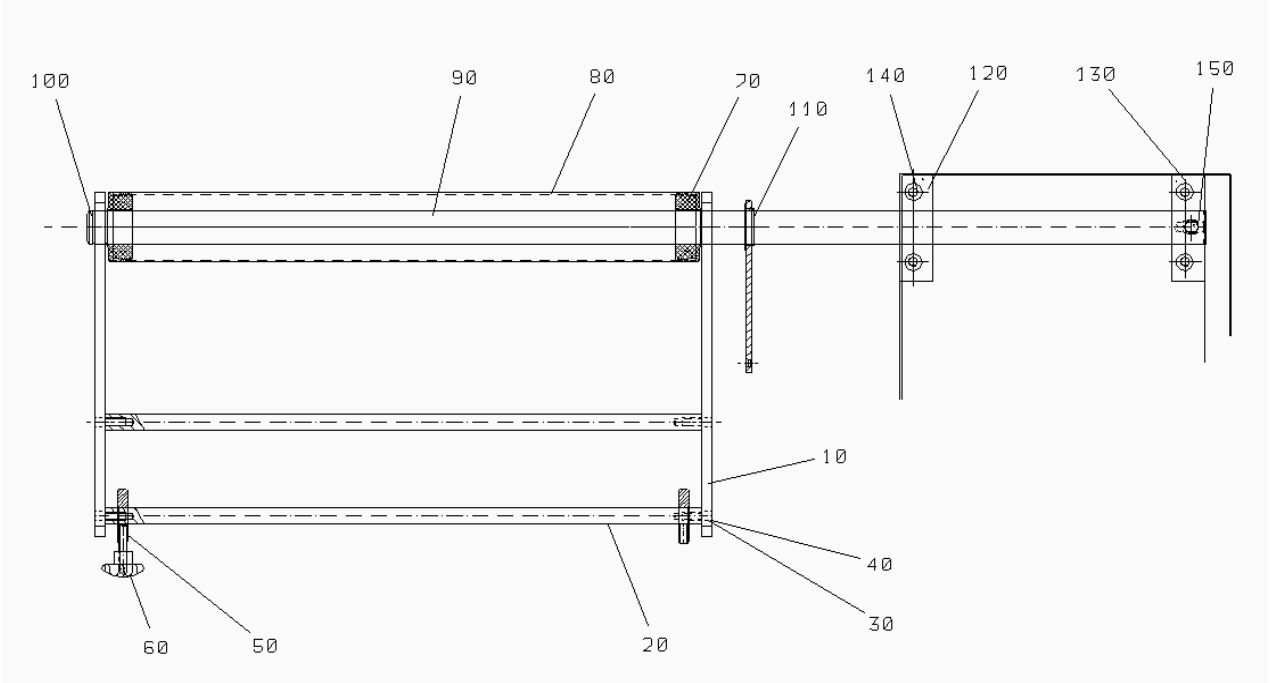

Spare parts list for VS20

Baugruppe:	**Top roller holding 320**	122436

Pos.	Artikelnr.	Bezeichnung
1	122437	Top axle
4	122305	Distance
5	77868	V-Seal-Ring
6	122433	Tumbler lever 285-355 kpl
7	101661	Bush
8	14009	O-Ring
9	17509	Slotted spring pin 6 x 40
11	82442	Top roller holding 285-355
12	49796	Rivet nut 6SKo
13	15438	Compression spring
14	82438	Brake unit
15	15930	Hex. Socket head screw M 6x 60
16	82463	Protection cap
17	102121	Mount
18	102122	Mount
19	54760	Hex. Socket head screw M 8x 12
20	41681	Hex. Socket head screw M 6 x 20
30	110403	Spring bolt

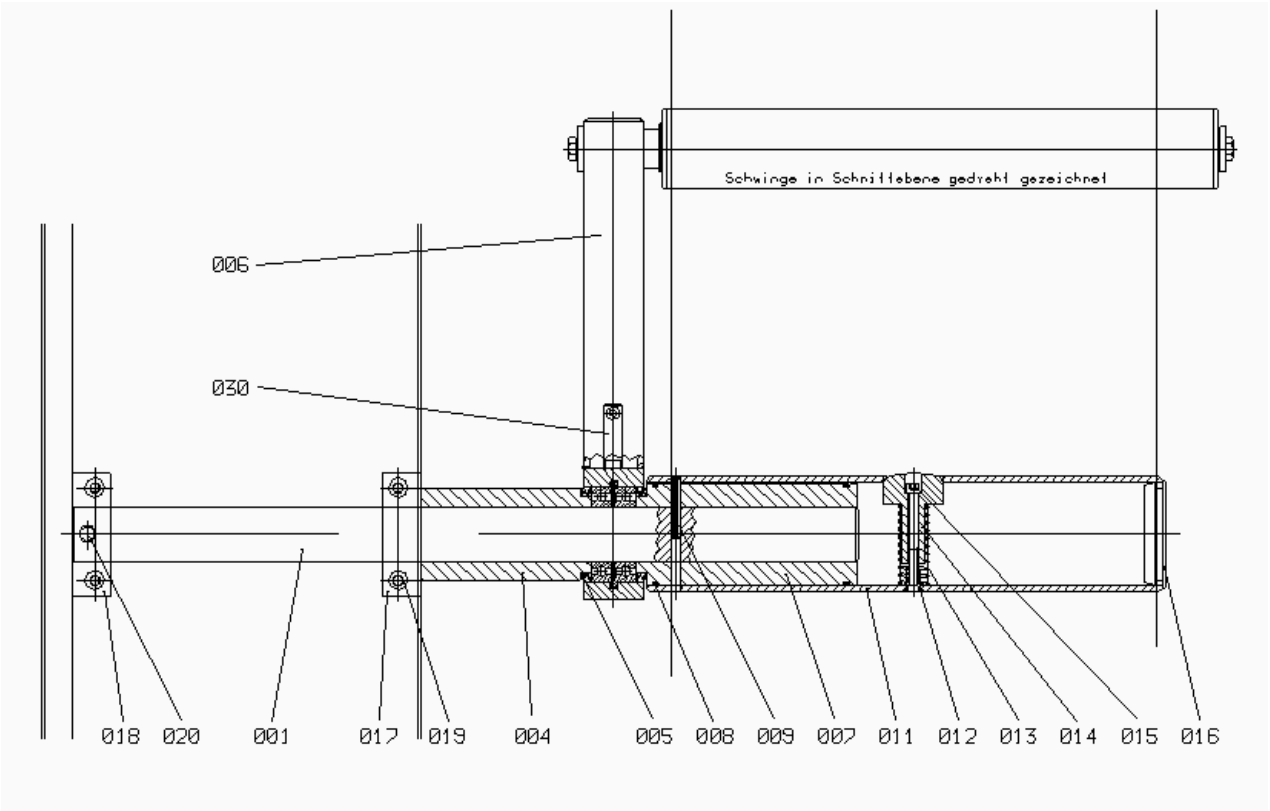

Spare parts list for VS20

Baugruppe:	**Rocker arm 285-355 kpl**	122433

Pos.	Artikelnr.	Bezeichnung
10	122417	Axle rocker roller 285-355
20	75426	Collar bearing for tail
30	122423	Distance D= 30 L= 4.0 d= 9.0
40	54761	Tail 285-355
50	101658	Hex head screw M 8 x 16
60	34085	Rocker arm welwed
70	77818	Grooved ball bearing 6007.2RS
80	117259	Distance D= 40 L= 2.0 d=35.0
90	36012	Spring bolt
100	39277	Retaining ring 25x 1,2
110	36012	Cover cap (Kunstst.) D18/11

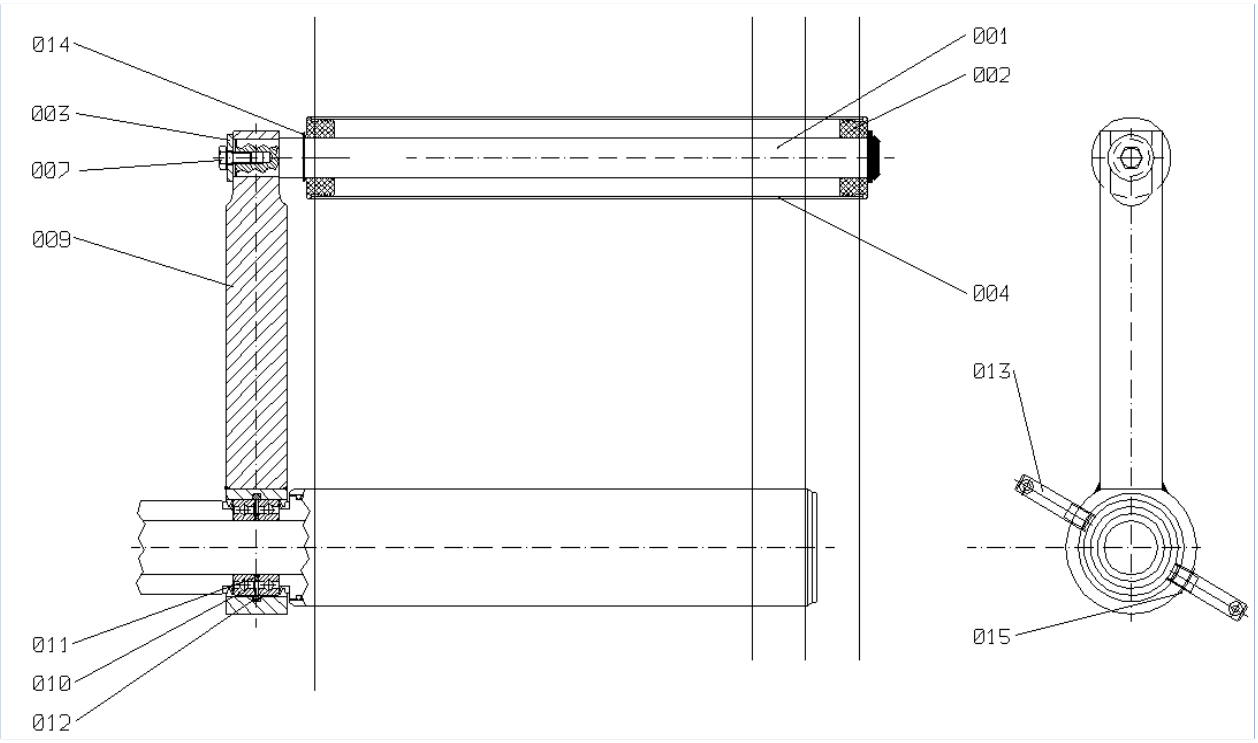

Spare parts list for VS20

Baugruppe:	**Tail 320 cpl.**	115142

Pos.	Artikelnr.	Bezeichnung
1	115140	Axle 285-355
3	39277	Retaining ring 25x 1,2
4	100436	Collar bearing
5	100437	Tail 285-355
8	102125	Mount
9	102126	Mount
10	41681	Hex head screw
11	34209	Hex socket head screw

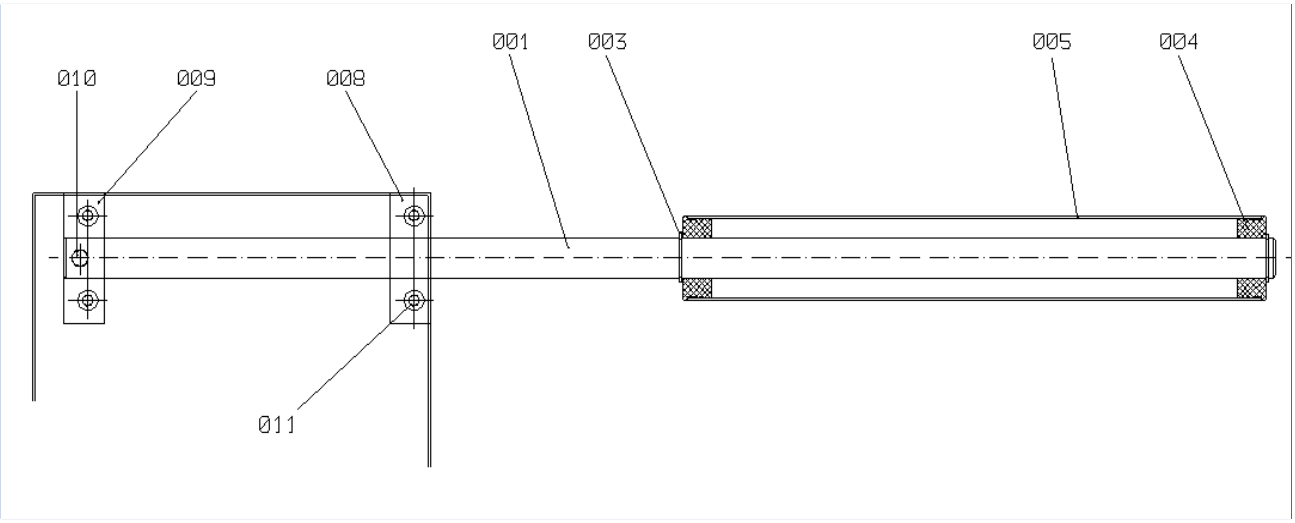

Spare parts list for VS20

Baugruppe:	**Protection cover VST/LS 320 cpl**	114805

Pos.	Artikelnr.	Bezeichnung
1	114804	Supporting panel VS20.5
2	102171	Distance
3	15829	Washer A 8.4
4	54713	Hex head screw M 8 x 70
5	84488	Mount
6	15949	Fillister head screw M 5x 10
7	114806	Protection cover VST/LS 320
8	84487	Mount for magnet
9	36221	Fillister head screw M 5x 16
10	015917	Washer A 5.3
11	36221	Fillister head screw M5x16
12	62119	Acorn nut M5
100	067666	Operating magnet 30mm
110	067665	Safety sensor
120	084489	Angle for sensor
130	061281	Hex head screw M 8 x 16
140	019137	Hex.socket countersunk screw M5x30
150	035902	Lock washer A5.3
160	062119	Acorn nut M5
170	015958	Hex.socket countersunk screw M4x20

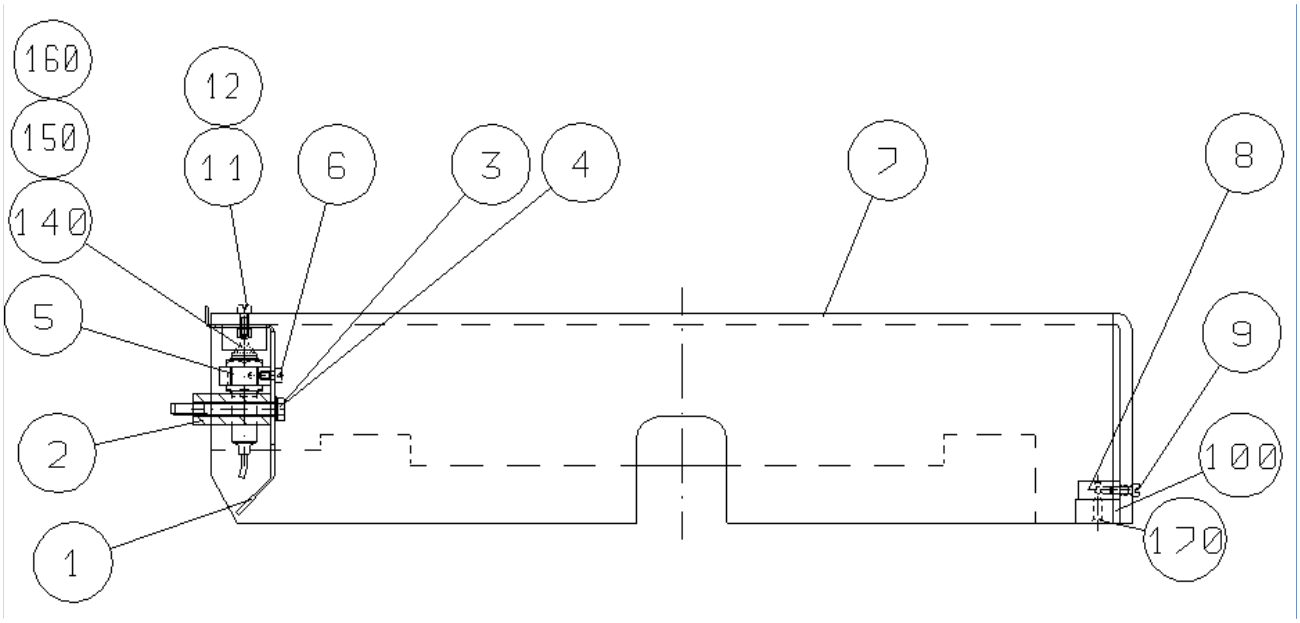

Spare parts list for VS20

Baugruppe:	**Protection cover moulding point**	127357

Pos.	Artikelnr.	Bezeichnung
10	127358	Protection cover 320x150 VS20
20	105098	Mount for magnet
30	016027	Hex.socket countersunk screw M4x20
40	067666	Operating magnet 30mm
50	015952	Hex.socket countersunk screw M5x16
60	036209	Hex.socket set screw M5x20
70	115890	Acorn nut M 5

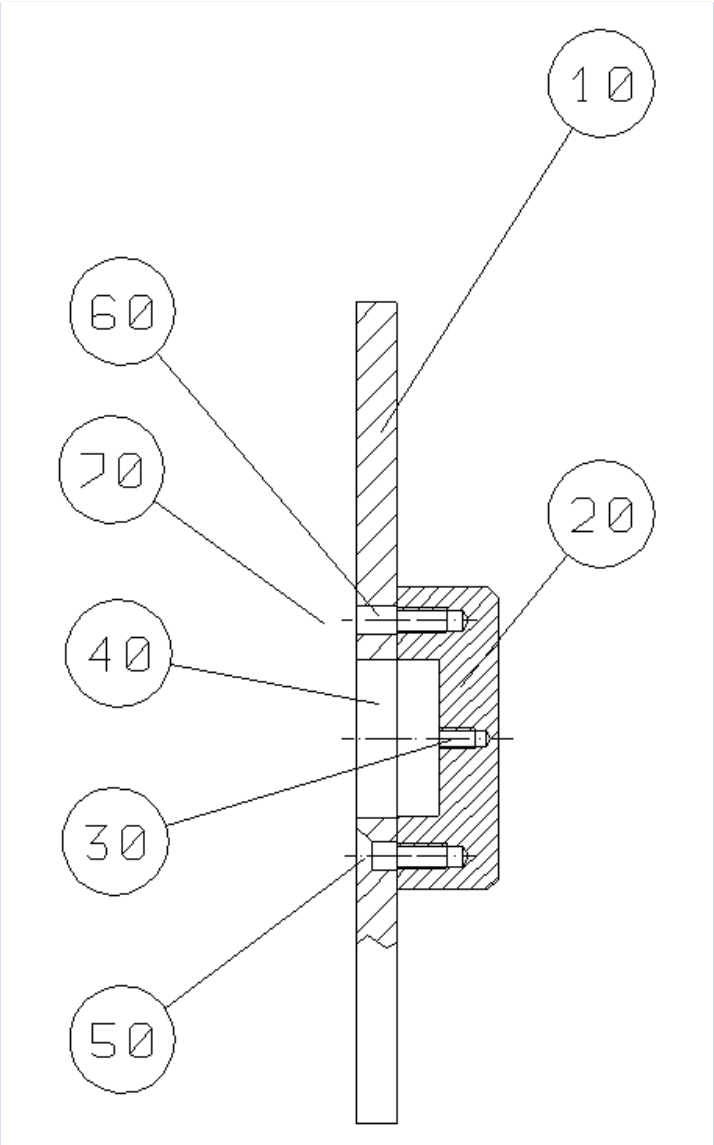

Spare parts list for VS20

Baugruppe:	**Protection strip 320**	118887

Pos.	Artikelnr.	Bezeichnung
2	105952	Protection strip
2a	120865	Protection strip
10	105098	Mount for magnet
20	16027	Hex socket countersunk screw M 4x20
30	15952	Hex socket countersunk screw M 5x16
40	36209	Hex socket set screw M 5x20
50	115890	Acorn nut M5

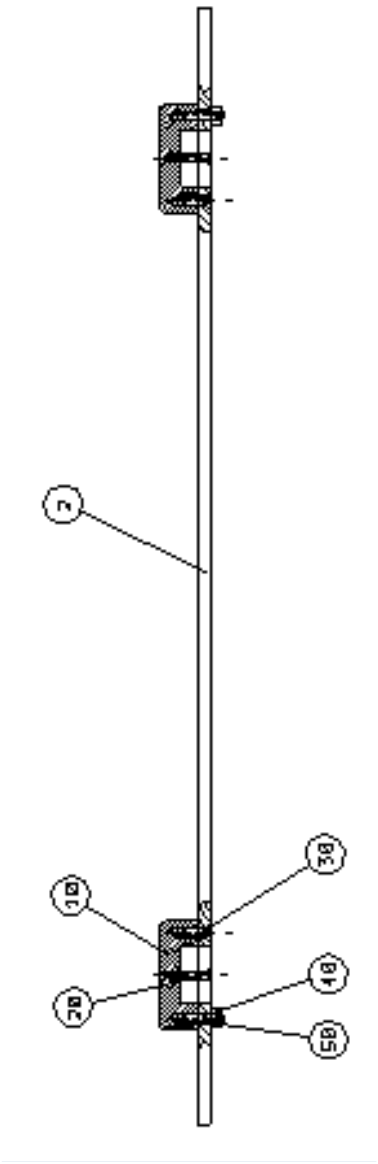

Spare parts list for VS20

HAJEK
the power of output

Baugruppe:	**Pump connection 40/63/100m³/h**	124804

Pos.	Artikelnr.	Bezeichnung
20	122877	Angle 90° 1 1/4" innen/außen
30	115388	Reducer doublenipple 1 1/4" - 1"
40	117702	T-piece 1" with connection G1/4"
		für Winkeleinschraubanschluß G1/4"
50	45312	Screwed straight connection 10 R 1/4"
110	109350	Nozzle 1", NW25
120	48964	Pneumatic hose NW 25
130	102833	Hose clamp d=25-40 b=9
140	115392	2/2 Oblique-seated valve 1" (1/4")
		mit G 1/4" Anschluss für Belüftung
150	45312	Screwed straight connection 10 R 1/4"
160	115391	Hex double nipple 1"
170	113877	Angle 90° 1" innen/außen
210	115391	Hex double nipple 1"
220	115392	2/2 Oblique-seated valve 1" (1/4")
		mit G 1/4" Anschluss für Belüftung
230	45302	Screwed connection angular 8 R 1/4"
240	115391	Hex double nipple 1"
250	115437	Cross piece 1"
310	115391	Hex double nipple 1"
320	114669	2/2 Pneumatic valve
330	11223	Silencer R 1", Typ 2941
360	113877	Angle 90° 1" innen/außen
370	084583	Nozzle 1", NW30
380	014873	Pneumatic hose NW 30
390	102833	Hose clamp d=25-40 b=9
400	113877	Angle 90° 1" innen/außen
460	115391	Hex double nipple 1"
470	84578	T-piece 1"
480	109350	Nozzle 1", NW25
490	48964	Pneumatic hose NW 25
500	102833	Hose clamp d=25-40 b=9

Spare parts list for VS20

Baugruppe:	**Pump connection 40/63/100m³/h**	124804

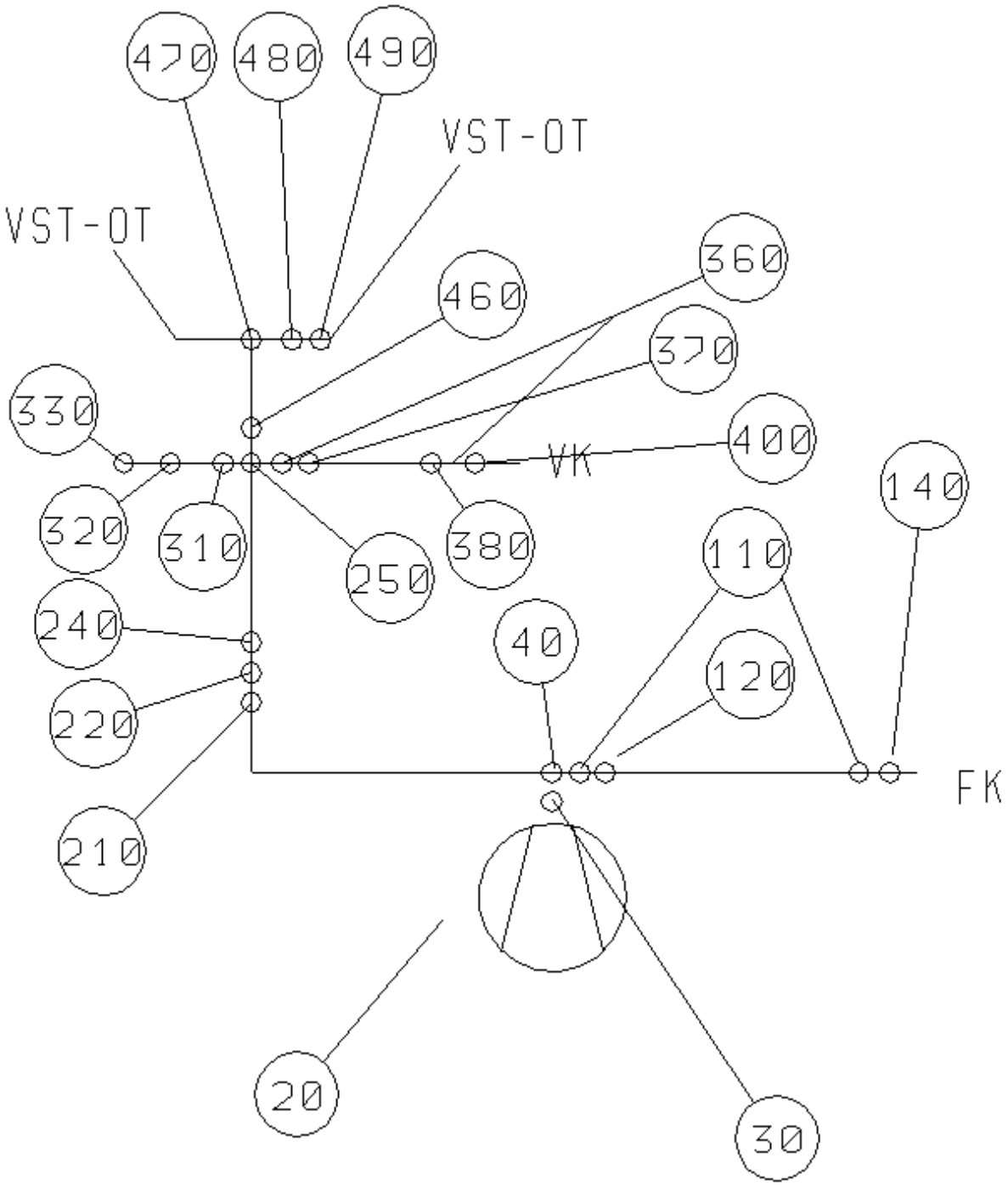

Spare parts list for VS20

Baugruppe:	**Pneumatic forming valve HL**	116566

Pos.	Artikelnr.	Bezeichnung
10	116558	2 x 3/2" Vale
40	5000	T-connection
50	19853	Pneumatik hose PL-6 blue

Spare parts list for VS20

Baugruppe:	**Pneumatic evacuation valve HL**	116567

Pos.	Artikelnr.	Bezeichnung
10	116558	2 x 3/2" Vale
40	5000	T-connection
50	19853	Pneumatik hose PL-6 blue

Spare parts list for VS20

Baugruppe:	**Pneumatics basicpack**	114690

Pos.	Artikelnr.	Bezeichnung
10	13486	Hose for cleaner
15	10258	Lead-in ferrule
20	11213	T-connection
25	13017	Hose clamp Ideal d=12-20 b=9
30	11203	Straight connection
35	35954	Muff QM-3/8-3/8
40	11212	Screwed angle connection
45	11383	T-connection
50	45302	Screwed connection angular 8R 1/4"
55	45304	Screwed connection angular 6R 1/4"
60	14746	Screwed plug R 1/4"
60	101930	Screwed plug R 1/4"
65	45017	Screwed connection angular 10R 1/4"
66	11200	Straight connection
70	114691	End plate set G 3/8"
80	24884	Silencer R 3/8"
90	19855	Silencer R 1/8"
100	48571	Screwed straight connection 6R 1/8"
110	45018	Screwed straight connection 10R 3/8"
120	45202	Screwed straight connection 8R 1/4"
130	15944	Hex socket head screw M 4x40
140	57128	Hex nut-self locking M 4
150	56252	Coachwork washer B4,3

Spare parts list for VS20

Baugruppe:	**Pneumatic valve for sealing**	116215

Pos.	Artikelnr.	Bezeichnung
10	114726	5/2 Valve
20	114723	Connector socket
25	114724	Intermadiate plate
30	45312	Screwed straight connection
35	14746	Screwed plug
40	45137	Pneumatic -hose PU- 108 blue
45	114735	Separating member
50	114731	Presser controler G1/4 0,5-10 bar
60	116216	Pressure gauge 0-10 bar 1/8"
61	87019	Threaded rod M 4 x 90
62	87020	Distanzce
63	57128	Hex nut-self locking M4
64	15939	Hex nut M4
70	114733	Pneumatic connection NL2
75	115879	Sealing ring
80	114761	Feeding plate
85	114735	Separating member
90	114784	Non-return valve 1/4"
100	45305	Screwed connection angular 10 R 3/8"
110	45017	Screwed connection angular 10 R 1/4"
120	17745	Screwed plug
130	11240	Hex nipple

Spare parts list for VS20

Baugruppe:	**Pneumatic valve for film pressing**	116218

Pos.	Artikelnr.	Bezeichnung
10	114726	5/2 Valve
20	114723	Connector socket
25	114724	Intermadiate plate
26	116239	Feeding plate
30	45312	Screwed straight connection 10R 1/4"
35	14746	Plug
40	45137	Pneumatic -hose PU- 108 blue
45	114735	Separating member
46	11220	Silencer R 1/4"
50	114731	Presser controller G1/4 0,5-10 bar
60	116217	Pressure gauge 0-2,5 bar 1/8"
70	116219	Sealing ring 1/8"

Spare parts list for VS20

Baugruppe:	**Cooling FK+VKD**	100220

Pos.	Artikelnr.	Bezeichnung
70	13352	Pressure -reducing valve
72	21979	2/2 Valve
73	79363	Hex nipple
75	45305	Screwed connection angular
76	11211	Screwed angle connection
77	49363	PVC-Hose
78	78765	Distance
79	15941	Hex socket head screw
81	11228	Pressure gauge

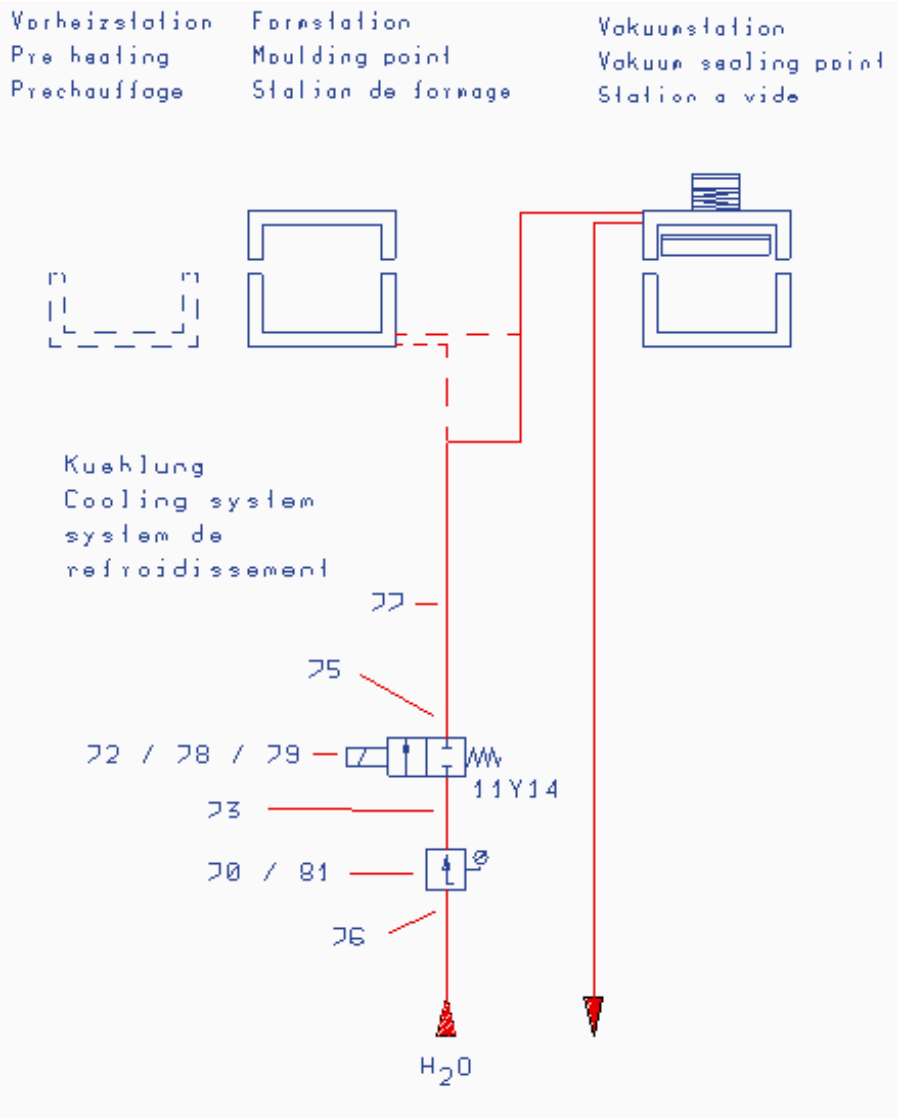

Spare parts list for VS20

Baugruppe:	**Gas flushing unit VS**	120112

Pos.	Artikelnr.	Bezeichnung
2	11211	Screwed angle connection
3	34353	T-connection
6	36455	Pneumatic female-plug
8	11348	Hose clamp Ideal
13	011210	Screwed angle connection
14	20651	Sealing ring
15	11380	Reducer nipple
16	22957	Sealing ring
17	21979	Valve
18	078765	Distance
19	016338	Hex socket head screw
20	15907	Washer
21	34222	Hex nipple
22	67129	Pressure -reducing valve
24	011206	Screwed connection
25	13484	PVC-Hose
26	35910	Hose clamp antirust
26	13017	Hose clamp Ideal
40	35959	Coupler
50	054586	Coachwork washer
60	015927	Hex nut

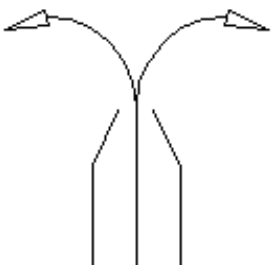

Ba

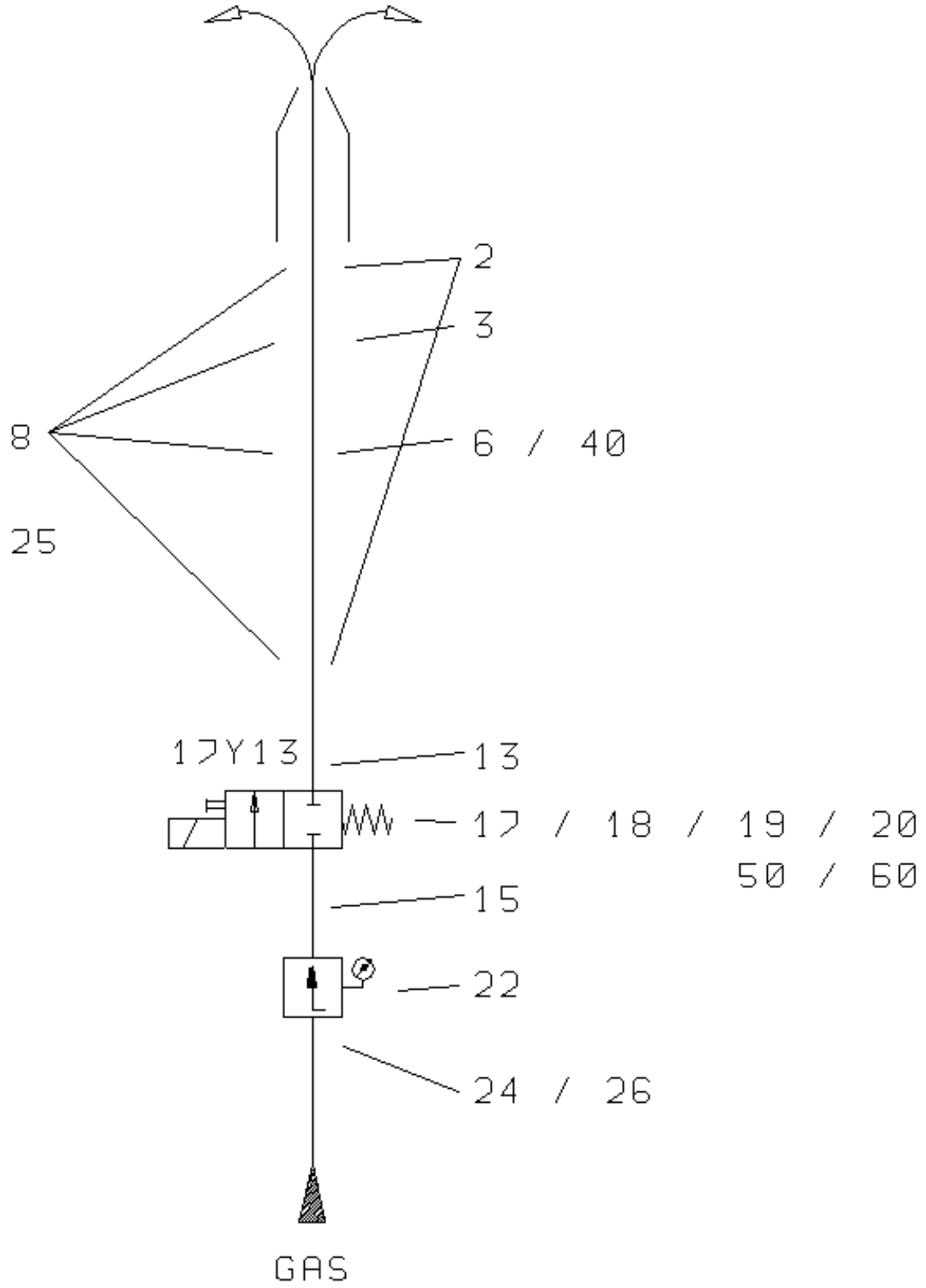

Spare parts list for VS20

Baugruppe:	**Safety slide 320**	114667

Pos.	Artikelnr.	Bezeichnung
10	114798	Safety plate 320
20	84811	Security switch
30	36137	Hex head screw
40	15863	Washer
45	057128	Hexagon nut M4
50	114696	Retaining safety switch
60	34738	Hex socket countersunk screw M 4x1 2
80	84812	Handle cross mounting
90	15944	Hex socket head screw M 4 x 40
95	120184	Hinge bearing
100	114697	Mount for sheet metal/Cylinder
105	020316	Clamping sleeve 4 x 30
110	34807	Hex socket countersunk screw M4x 8
125	112434	Guide Igus
130	20251	Hex socket countersunk screw M6x 16
140	114698	Cross bar
150	17253	Hex head screw M 8x 20
160	15829	Washer
180	16353	Hex head screw M 8x 35
190	15927	Hex nut M 6
200	104757	Cylinder DSN-16-160-P
210	38404	Throttle valve

Bei Bes
When c
order d

Baug

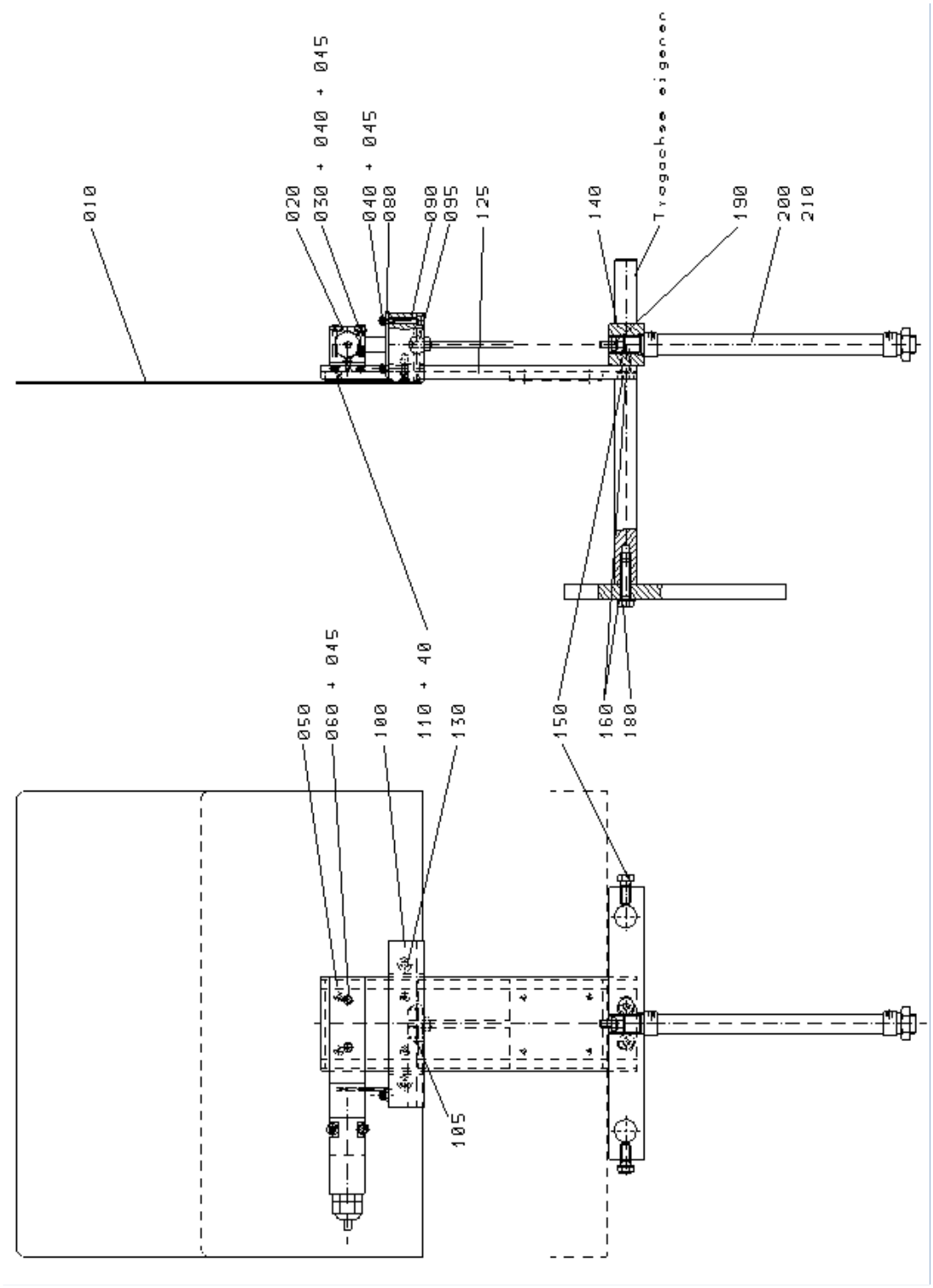
010
020
030 + 040 + 045
040 + 045
080
090
095
125
140
Trogachse eigener Pos.
190
200
210
050
060 + 045
100
110 + 40
130
150
160
180
105

Spare parts list for VS20

Baugruppe:	**Pneumatic safety slide sleeve**	115044

Pos.	Artikelnr.	Bezeichnung
10	114726	5/2 Valve
20	114723	Connector socket
25	114724	Intermadiate plate
45	114735	Separating member
50	114731	Presser controler G1/4 0,5-10 bar
60	116216	Pressure gauge 0-10 bar 1/8"
70	114733	Pneumatic connection
75	116219	Sealing ring 1/8"
80	114761	Feeding plate

Spare parts list for VS20

Baugruppe:	**Supporting plate 320-300**	102764

Pos.	Artikelnr.	Bezeichnung
10	102178	Support bar 320
20	102200	Washer
30	35826	Hex socket countersunk screw
40	71062	Hex nut M10
50	114959	Supporting panel 320
60	102743	Track guard
70	102743	Track guard
80	102180	Distance nut
90	41681	Hex head screw
110	109253	Distance bush

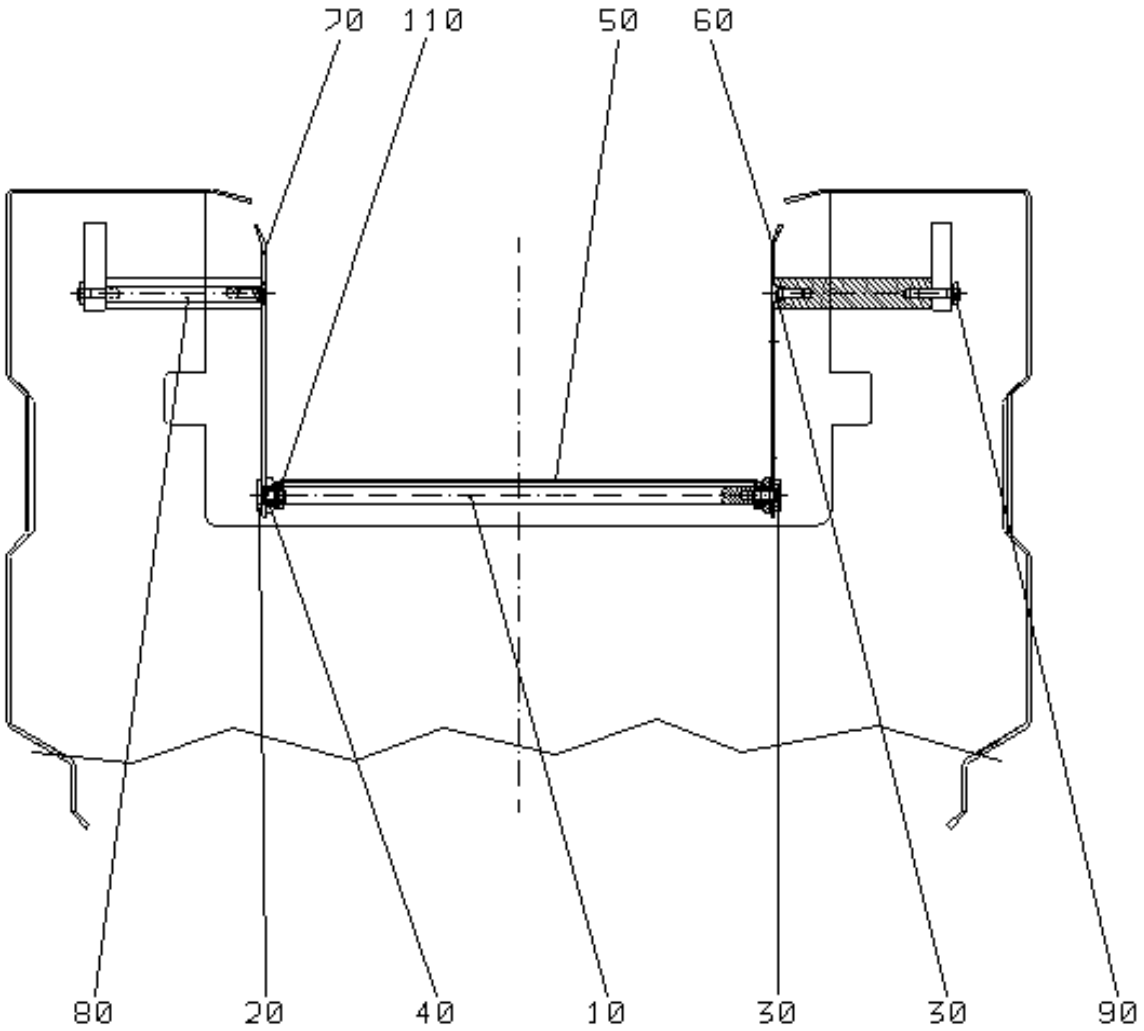

Spare parts list for VS20

Baugruppe:	**Cross cutting system horizontal 320**	113682

Pos.	Artikelnr.	
1	113675	Cylinder QSP-P25-00000-0280
3	113664	Spare parts cross cutting system

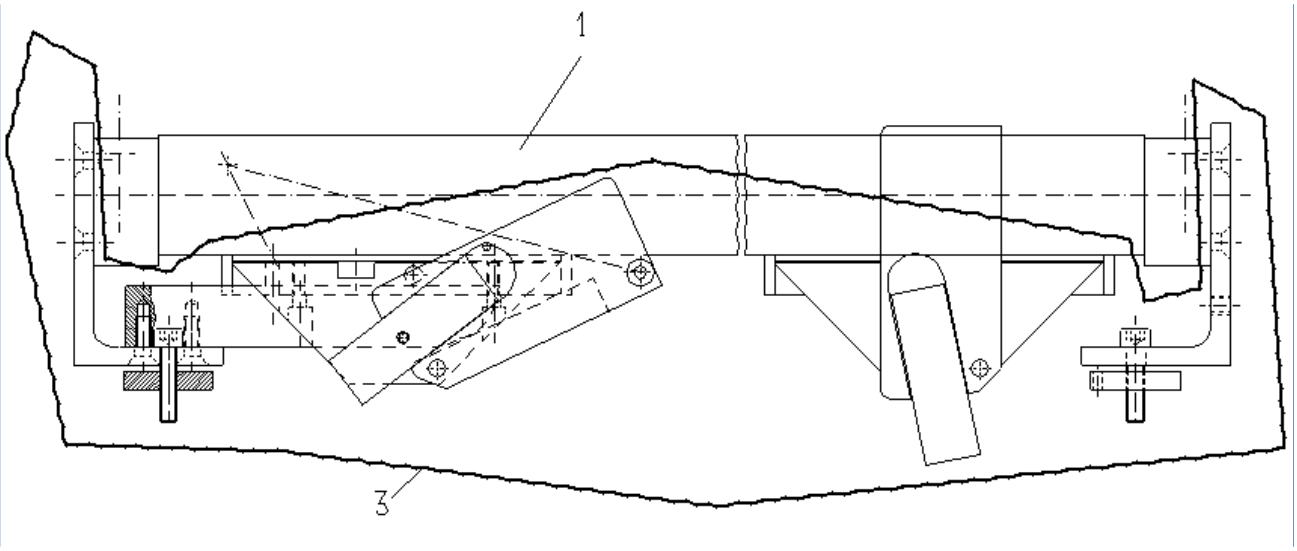

Spare parts list for VS20

Baugruppe:	**Spareparts crosscutting system**	113664

Pos.	Artikelnr.	Bezeichnung
4	113662	Spindle guide
5	34309	Split pin
6	36101	Slotted spring pin
7	15915	Hex socket head screw
9	34301	Knife holder
10	35825	Hex socket countersunk screw
11	15939	Hex nut
12	57128	Hex nut-self locking
13	10021	Tension spring galvanized
14	57130	Hex nut-self locking
15	15907	Washer
16	34302	Axle
17	110963	Hex socket head screw
18	56252	Coachwork washer
19	18045	Loctite 601
20	34303	Angle BS
22	34304	Angle MS
23	36008	Threaded insert
24	15909	Hex socket countersunk screw
26	34305	Clamping piece
27	15814	Hex socket head screw
28	34307	Slotted spring pin
29	34306	Cam stick
30	15929	Hex socket head screw
32	23470	Knife blade
34	11248	Elbow
36	34009	Throttle valve
40	15922	Hex socket head screw

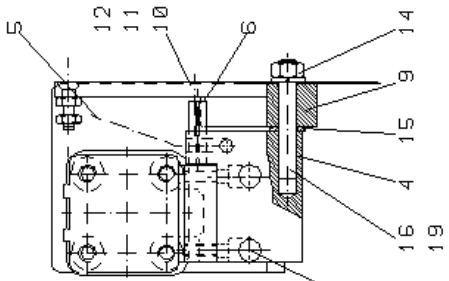

Bei Bestellungen Stk. angeben!
When ordering sp
order designation

Baugruppe:	113664

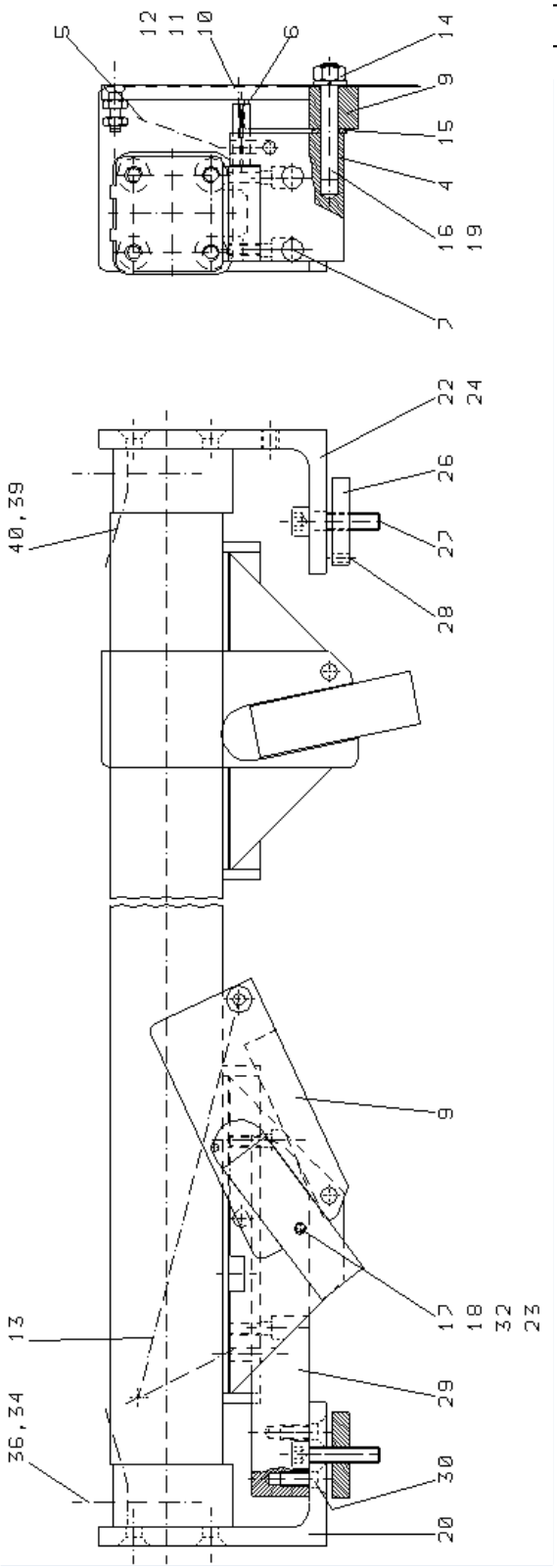

Spare parts list for VS20

HAJEK
the power of output

Baugruppe:	**Mechanic puncher 320 (Zyl.=100)**	054427

Pos.	Artikelnr.	Bezeichnung
1	44992	Support 320
2	44993	Guide
3	20251	Hex. socket countersunk screw
4	44994	Guide column rest /joint)
5	15912	Hex socket head screw
6	44995	Bolt
7	48124	Set collar
8	16285	Hex sockt set screw
10	44996	Elevating bidge
11	10690	Ball bush
12	10126	Retaining ring
14	44997	Top lever
15	45012	DRY STAR-bush
16	36091	Hex socket set screw
17	44998	Bolt
18	44999	Under lever
19	45013	DRY STAR-Sleeve
20	45000	Sprocket axle
21	45014	Shim ring
22	45001	Bolt
23	41191	Hex socket set screw
25	45002	Cylinder yoke
26	45003	Cylinder lever
27	45011	DRY STAR-bush
28	34086	Shim ring
29	39277	Retaining ring
30	45004	Washer
31	45010	Roller
35	45005	Guide column
36	56366	Washer
37	57135	Hex.nut-self locking
38	45006	Table support 320
39	15903	Hex socket head screw
41	54431	cylinder plate
42	54374	Cylinder
	36166	Wearing parts set QA/8100A/00
43	17280	Hex socket head screw
44	15828	Hex.socket head screw
45	15829	Washer
52	24883	Bow

Baugruppe:	**Mechanic puncher 320 (Zyl.=100)**	054427

53	76483	Air relief valve
54	45017	Screwed connection angular
55	45018	Screwed straight connection
56	11381	Reduction bushing (nipple)

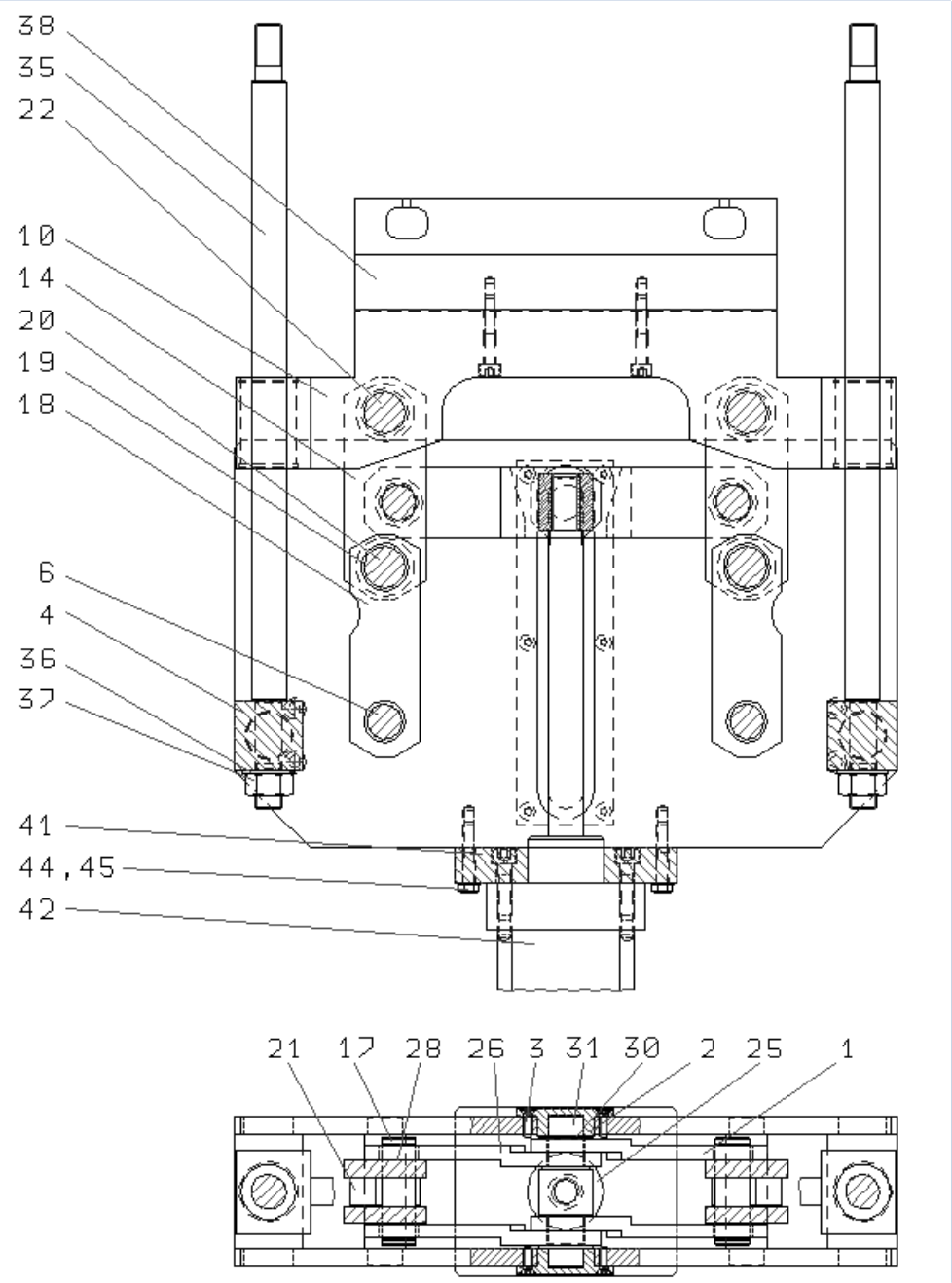

Spare parts list for VS20

Baugruppe:	**Cross beam EST 320 VS**	120735

Pos.	Artikelnr.	Bezeichnung
1	48101	Ring nut
2	48102	Mounting
3	103532	Clamping plate VS
4	48104	Vacuum nozzle
5	48105	Cover plate
6	48106	Cover 320
7	120730	Distance A
8	120731	Distance B
9	48109	Cross beam EST 320
10	36240	Pin
11	15610	Hex socket head screw
12	15903	Hex socket head screw
13	53011	Hex socket head screw
14	27656	Slotted spring pin
15	45302	Screwed connection angular
16	14746	Screwed plug
16	101930	Screwed plug
17	18040	Hydraulic sealing 542

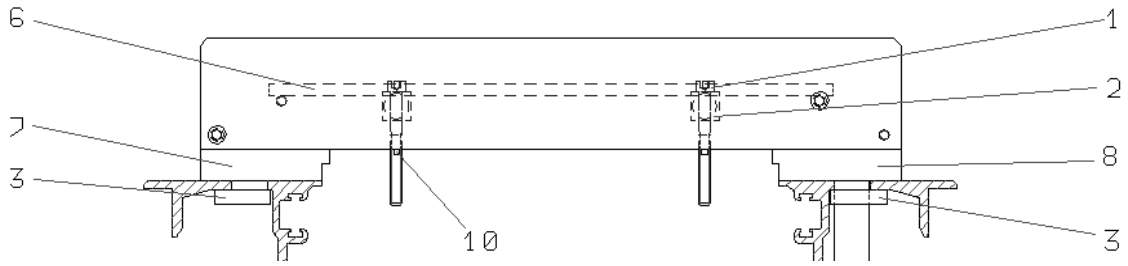

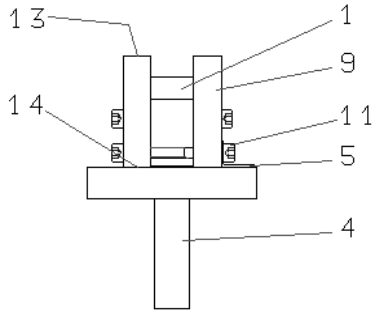

Spare parts list for VS20

Baugruppe:	**Corner cutting unit EST 320-2 Up**	114898

Pos.	Artikelnr.	Bezeichnung
1	114874	Punching knife assy 320
2	036951	Clamping plate
3	015909	Hex socket countersunk screw M5x12
4	036952	Pressure strip 320
5	041191	Hex socket set screw M6x25
7	015927	Hex nut M6
8	036944	Center knife (star)
9	036945	Edge knife
10	114156	Space knife
11	036953	Strip spring Center
12	036954	Strip spring BS
13	036955	Strip spring MS
14	015822	Hex socket head screw M5x12
15	015917	Washer A5.3
16	043805	Punching anvil
17	043600	Spacer piece
18	114157	Distance

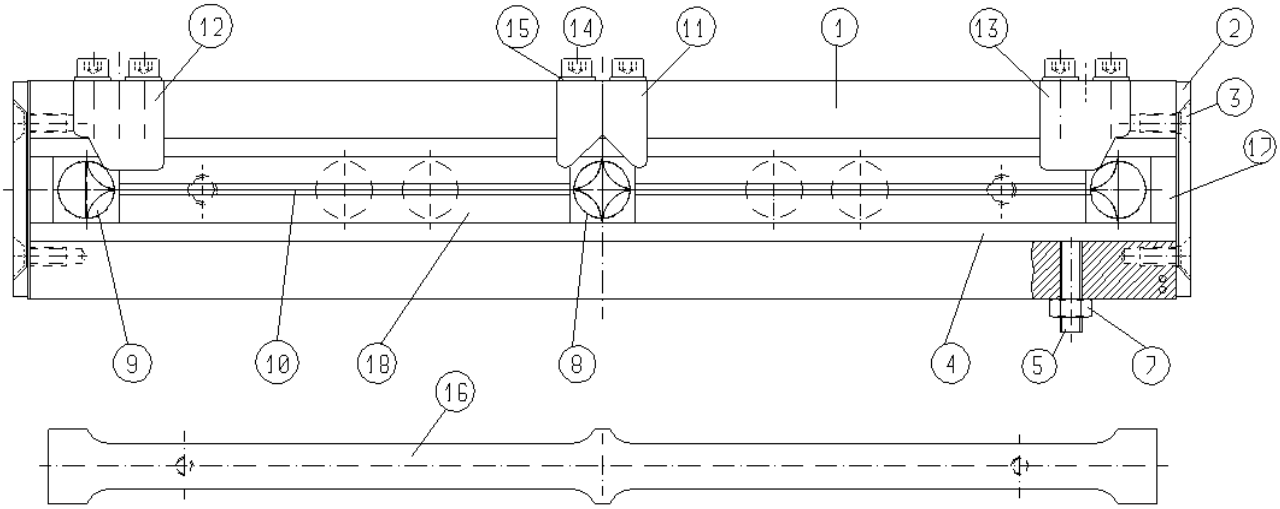

Spare parts list for VS20

Baugruppe:	**Longitudinal cutting mount 320 UP**	106612

Pos.	Artikelnr.	Bezeichnung
1	112894	Protective sheet LS 320 UP 1-4
2	15927	Hex nut M6
3	24749	Star screw
4	18039	Screw locking HF270
5	35898	Lock washer
6	101909	Support II
7	101919	Support III
8	20251	Hex socket countersunk screw
9	015927	Hex nut M6
10	84540	Bush
11	34347	Slotted spring pin
12	39276	Retaining ring
13	47518	Screwed joint (packed) HSK-K16
14	47515	Screwed joint (packed) HSK-K 9
30	105414	Support UP
40	079688	Distance
50	79688	Defection bar

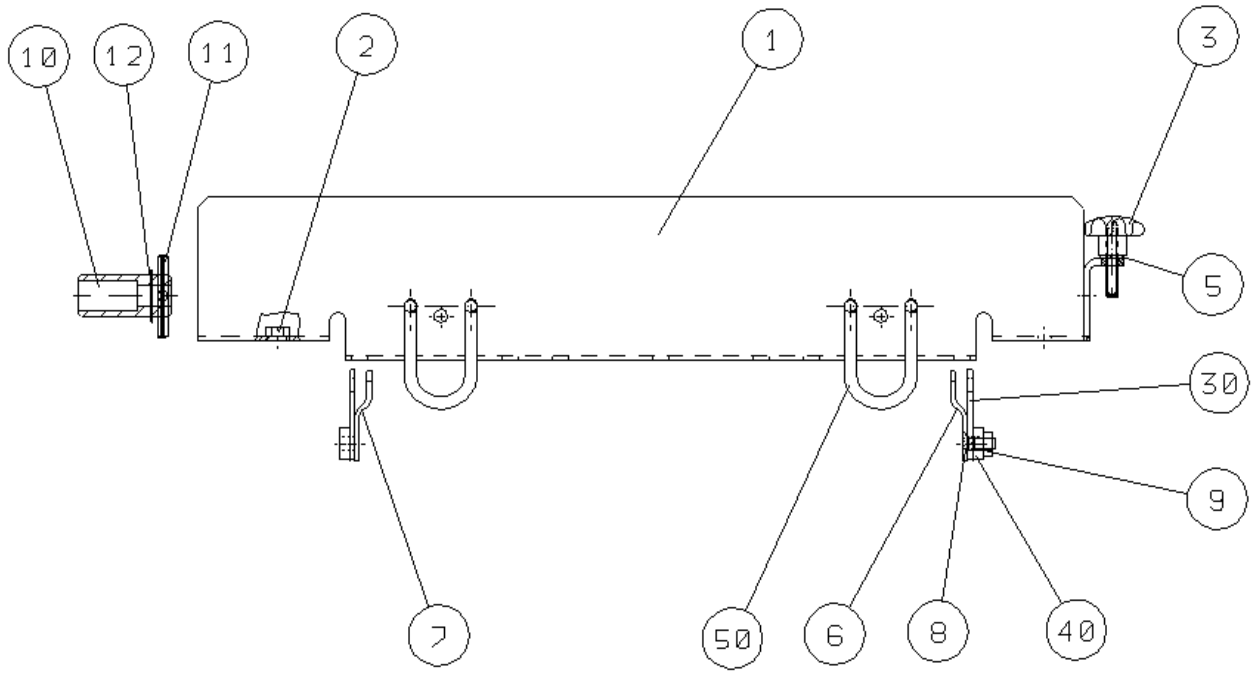

Spare parts list for VS20

Baugruppe:	**Longitudinal cutting shaft 320 Typ B**	039318

Pos.	Artikelnr.	Bezeichnung
1	42073	Longitudinal cutting shaft 320
2	17509	Slotted spring pin
3	34328	Dog coupling
4	34326	Compression spring
5	13989	O-Ring seal
6	35375	Grooved ball-bearing

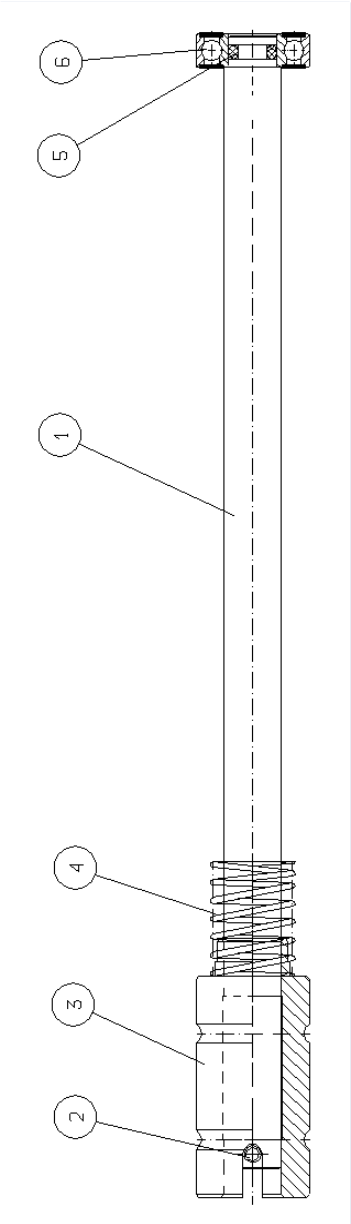

Spare parts list for VS20

Baugruppe:	**Longitudin cutting shaft 320-2 Typ B**	039320

Pos.	Artikelnr.	Bezeichnung
1	39318	Slitter shaft assy 320 Typ B
2	112361	Edge- knive

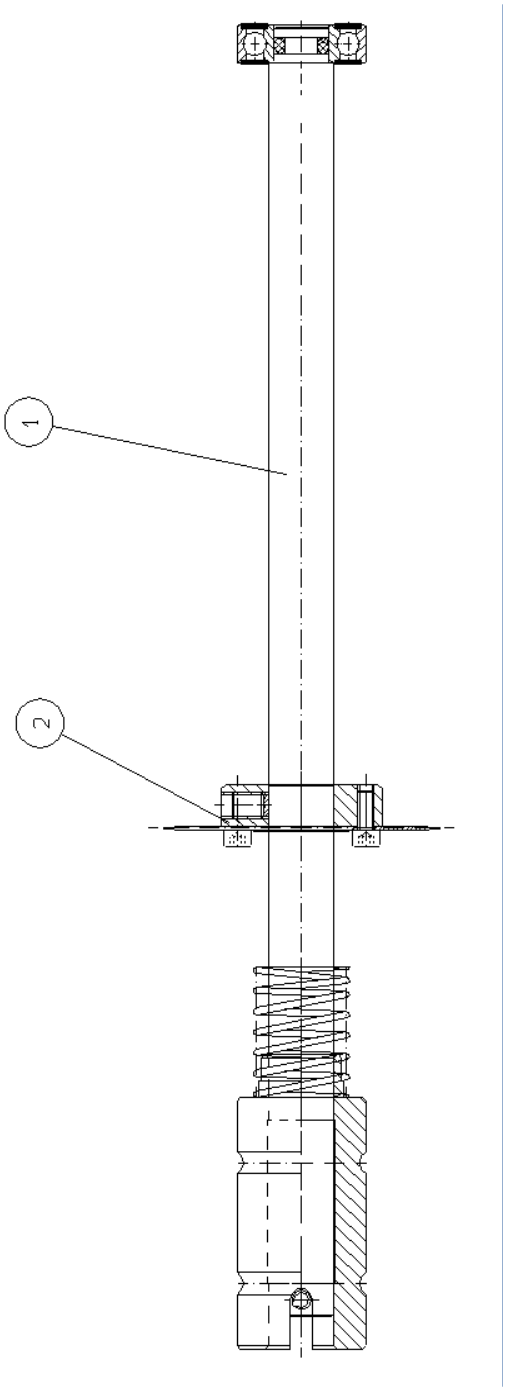

Spare parts list for VS20

Baugruppe:	**Discharge chute 320-2 LQ UP kpl**	127392

Pos.	Artikelnr.	Bezeichnung
2	84493	Guide plate
3	84494	Guide plate
4	15829	Washer A 8.4
5	17253	Hex head screw M 8 x 20
6	84520	Column for discharge chute
7	127393	Chute 320-2 LQ UP
8	65459	Acorn nut M 6
9	84524	Plug d= 6,4x 8
10	37458	Star screw
20	101854	Chute 320 NA

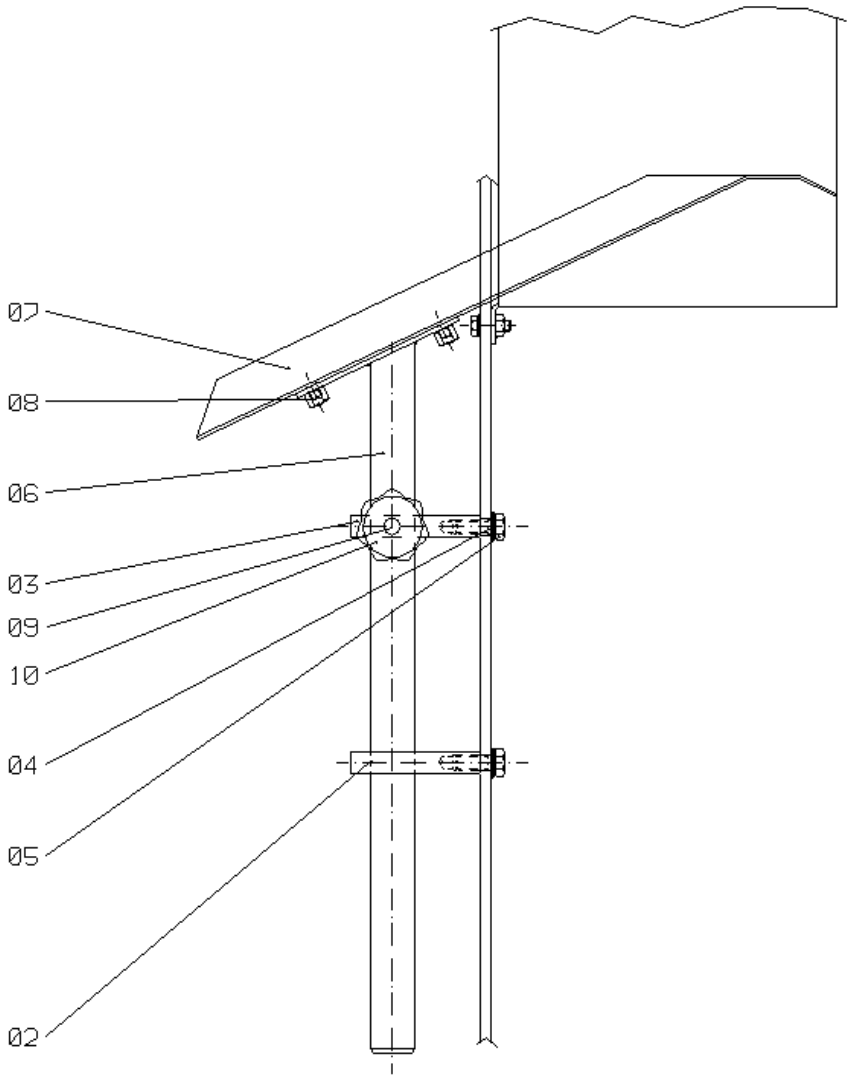

Spare parts list for VS20

Baugruppe:	**Discharge chute 320cpl. with hinged plate**	113728

Pos.	Artikelnr.	Bezeichnung
10	112767	Protection cover 320
20	107270	Axle 320 VS
30	113711	Bar for spring plate 320 VS40
40	34213	Torque spring
70	63385	Hex head screw
80	15927	Hex nut
90	17536	Threared rod
110	65459	Acorn nut

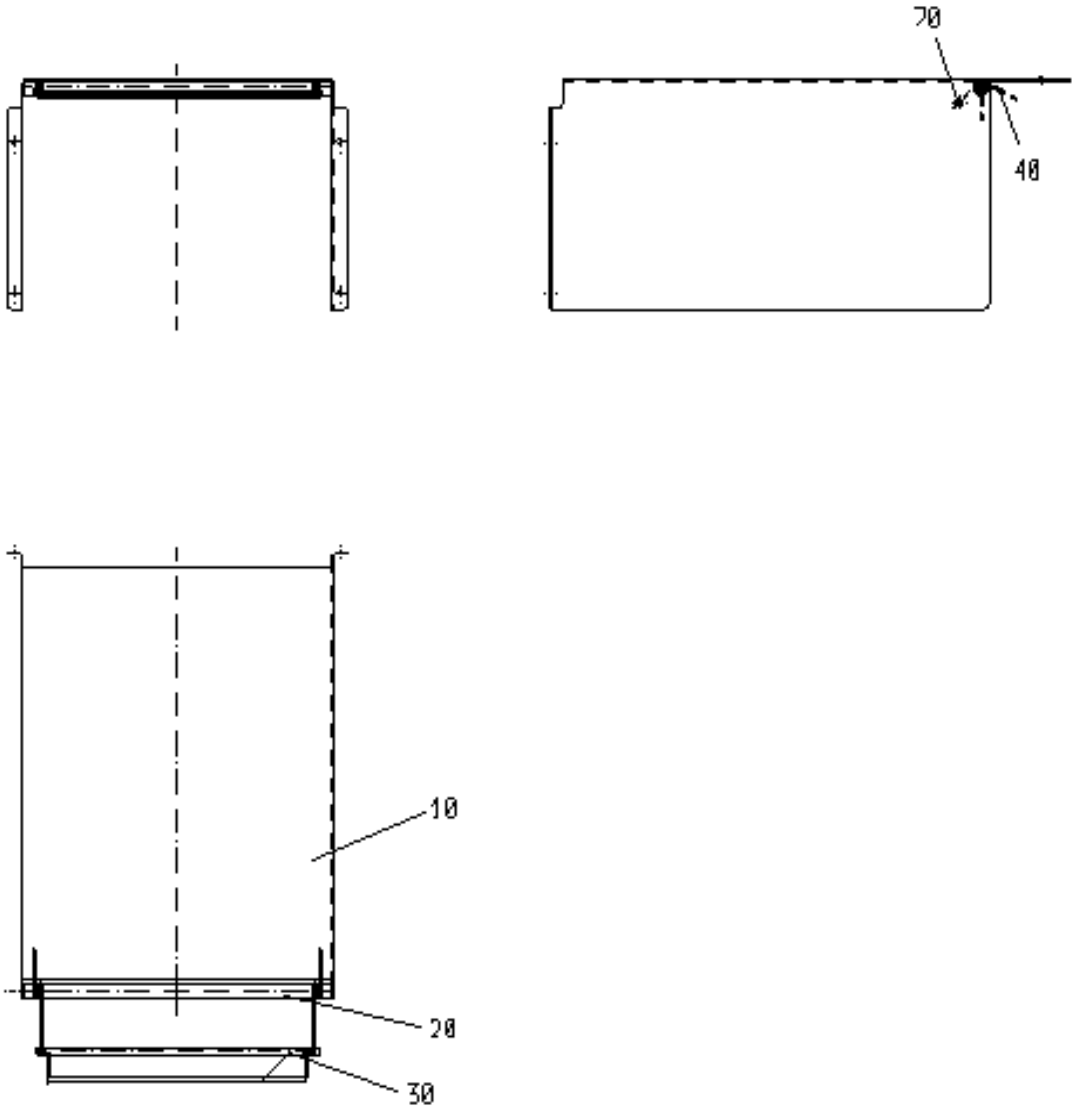

Spare parts list for VS20

Baugruppe:	**Rewinder 320**	116355

Pos.	Artikelnr.	Bezeichnung
10	107006	Rewinder pre assembly
20	047931	Rewinder variable parts
30	47914	Friction hub
40	47915	Pressure plate
50	15855	Hex socket head screw
60	24423	Comression spring
70	35816	Pin
80	47921	Spring ball
90	47916	Revolving coil cpl.
100	77678	Distance
110	15874	Hex socket head screw
120	65880	Clamping flage
130	15828	Hex socket head screw
140	113406	Helical-worm geared motor
150	15932	Hex socket head screw
160	113405	Dog coupling
170	36091	Pin

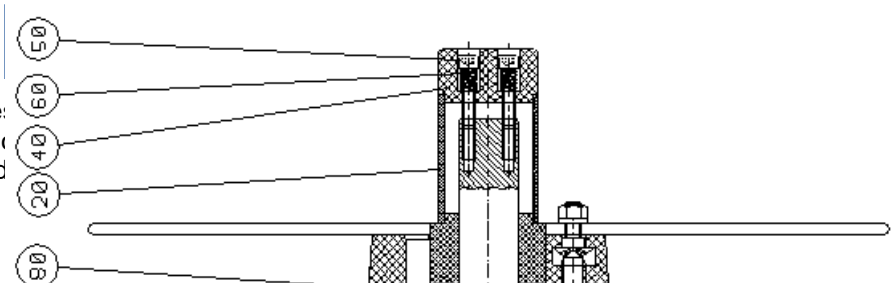

Bei Be
When
order d

Spare parts list for VS20

Baug

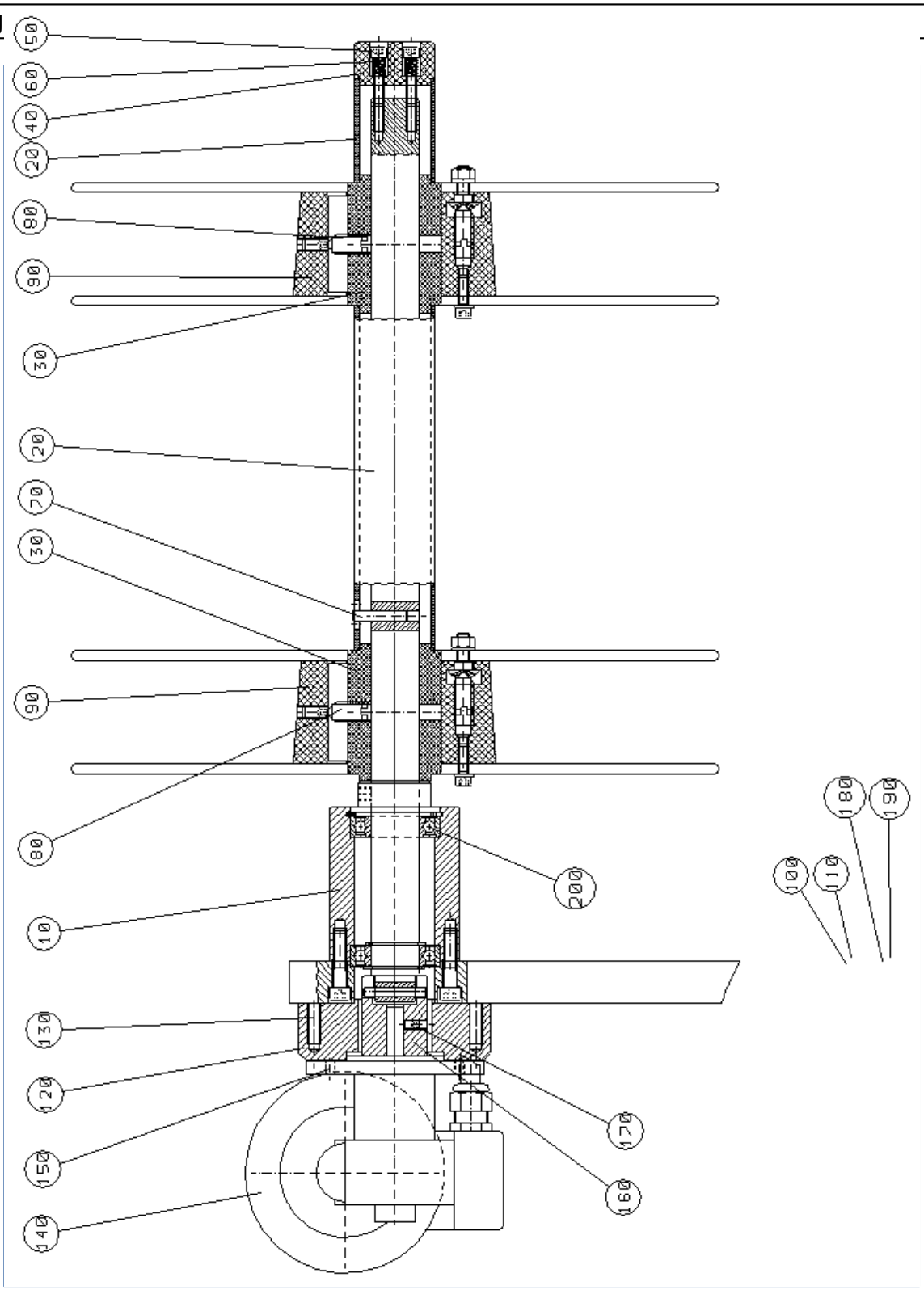

Spare parts list for VS20

Baugruppe:	**Rewinder pre assembly**	107006

Pos.	Artikelnr.	Bezeichnung
10	105564	Clamping plate
20	047929	Axle 260 - 374
30	047928	Spindle guide
40	010670	Grooved ball-bearing
50	039278	Retaining ring
60	020408	Retaining ring
70	015828	Hex.socket head screw M8 x 40
80	020741	Pin 5 x 40
90	048124	Set collar

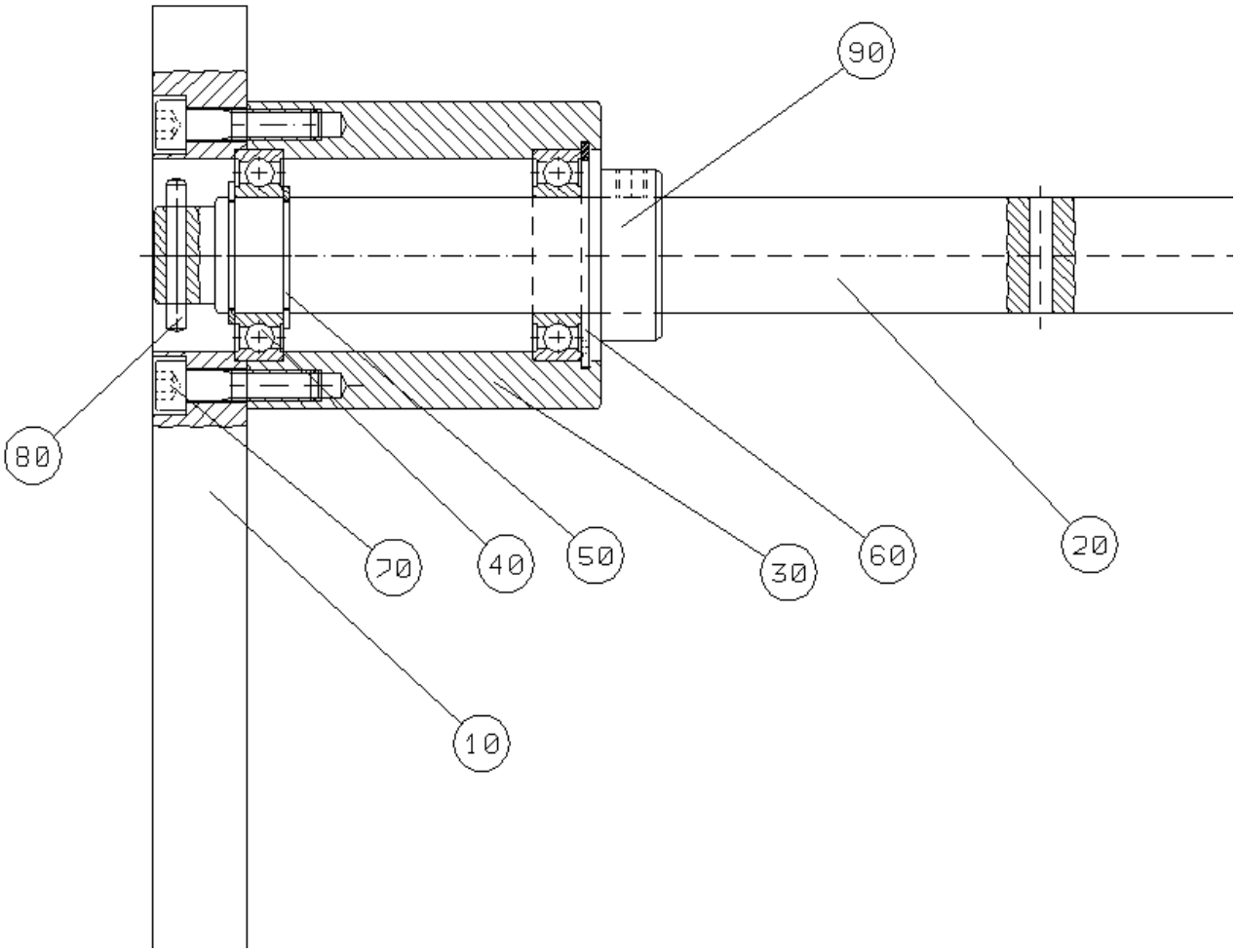

Spare parts list for VS20

Baugruppe:	**Package support holding fixture 320kpl.**	111795

Pos.	Artikelnr.	Bezeichnung
10	24749	Star screw
20	104823	Wearing distance clamping strip 320
30	111794	Wearing distance 320
40	62438	Hex head screw M 5 x 30
50	16020	Hex nut M 5

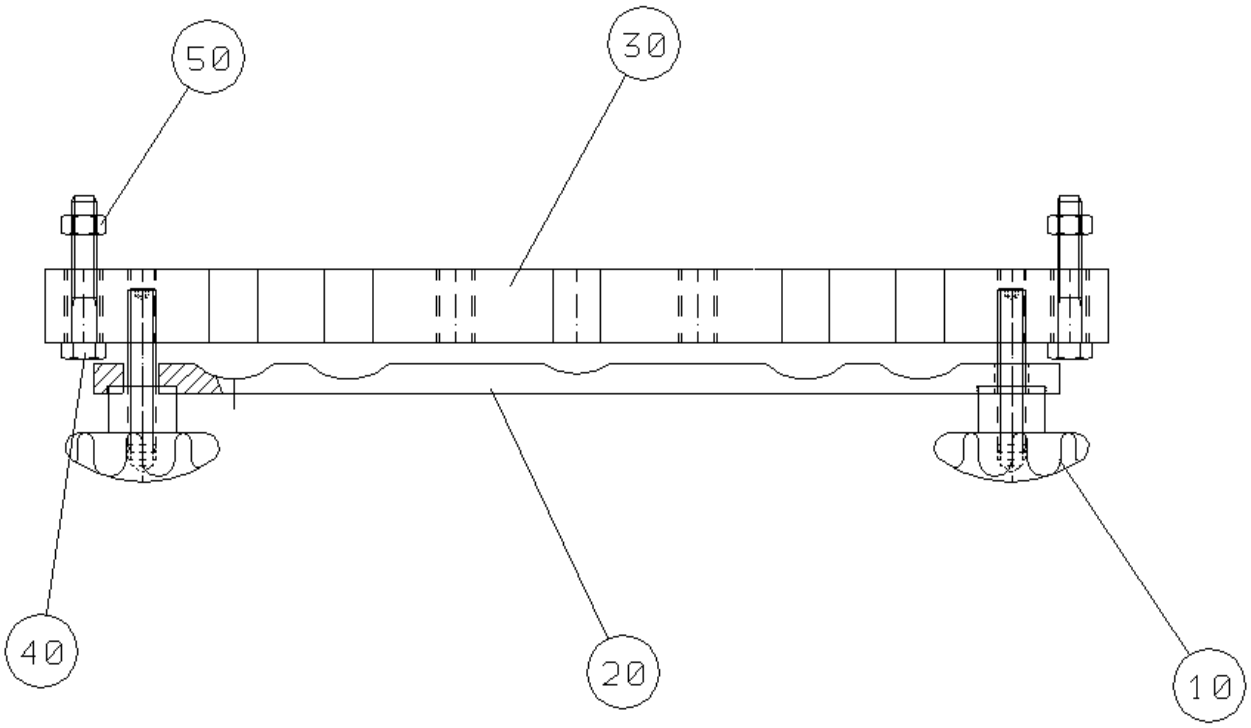

Spare parts list for VS20

Baugruppe:	**Formstation VH Up / Mouling station preheating**

Pos.	Artikelnr.	Bezeichnung	
1	108588 + 132122	Formblock einfache Form + NA	Moulding block + NA
2	108590 + 132121	Formkammer VH Zwickel für PO	Moulding chamber Godet for PO
6	103291	Heizplatte Formstation	Heater plate
7	030534	Heizstab	Heater element
4	065613	Isolierplatte	Insulator plate
5	065614	Deckplatte	Cover plate
10	110170	Stecker	Male plug
15	108591	Formoberteil	Master carrier
18	017415	SO-Parallelverbinder	Connector
20	040901	Temperaturfühler PT100	Temperature sensor
22	132123	Steckeinsatz 2/1	Divider insert
23	132126	Unterlage 5mm 2/1	Filler plate
23	132127	Unterlage 15mm 2/1	Filler plate
25	132128	Formeinsatz 2/1	Deep drawing insert
62	109506	Perforiermesser	Perforating blade

Spare parts list for VS20

Baugruppe: **Formstation VH UP / Mouling station preheating**

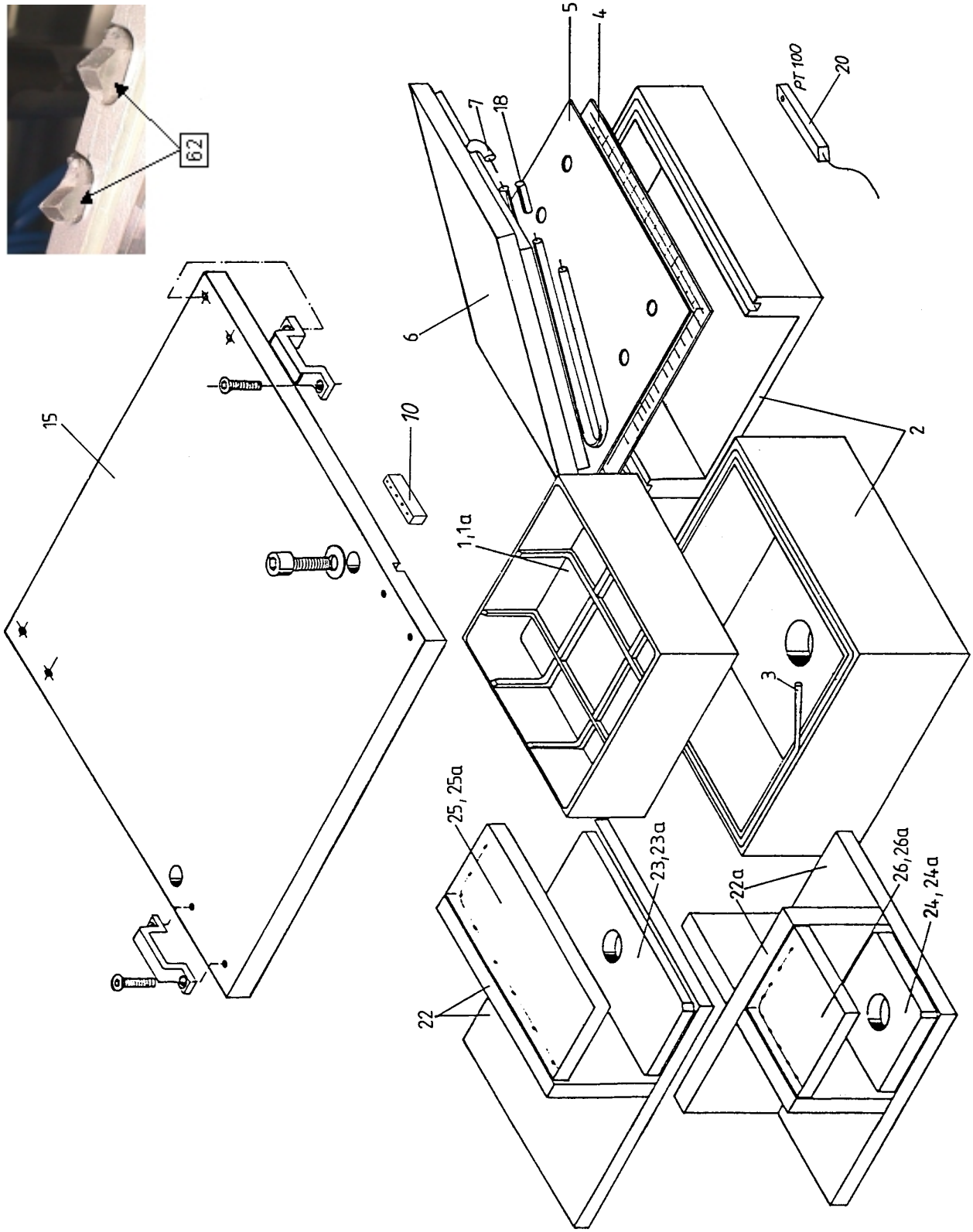

Spare parts list for VS20

HAJEK
the power of output

Baugruppe: **Vakuumstation UP / Vacuum station**

Pos.			
1	108607	Siegeleinheit 2/1	Seal unit
2	103302	Deckplatte	Cover plate
3	108606	Siegelmaske 2/1	Seal mask
4	030534	Heizstab	Heater element
5a	108610	Rahmenplatte I 2/1	Seal bar plate
5a	108611	Rahmenplatte II 2/1	Seal bar plate
14	103304	Isolierplatte	Insulator plate
15	103306	Vakuumkammerdeckel	Seal top case
16a	108583	Oberste Unterlage 2/1	Top filler plate
17a	108579	Unterlage 5mm 2/1	Filler plate
17a	108582	Unterlage 15mm 2/1	Filler plate
18	108600	Siegelgummi	Seal rubber
19	108603	Vakuumkammer 320/150	Vacuum chamber
22a	108577	Steckeinsatz 2/1	Divider set
23a	037097	Siegelgummisteg PO	Seal rubber ofr divider insert
30	034381	Führungsbuchse	Guide bush
31	114061	Druckfeder	Compression spring
32	034382	Senkschraube NA	Hex.socket countersunk screw NA
39	029859	Druckbolzen	Pressure pin
42	029858	Druckbolzen mit Gewinde	Pressure pin with thread
51	029856	Membran	Diaphragm
52	029855	Druckplatte	Pressure plate
53	029475	Dichtung	Seal
56	110170	Stifteinsatz	Plug attachment
59	017415	SO-Parallelverbinder	Connector
61	040901	Temperaturfühler PT100	Temperature sensor
62	067379	Gas Düse	Gas nozzle
62a	108428	Evakuierdüse	Vacuum nozzle

Spare parts list for VS20

HAJEK
the power of output
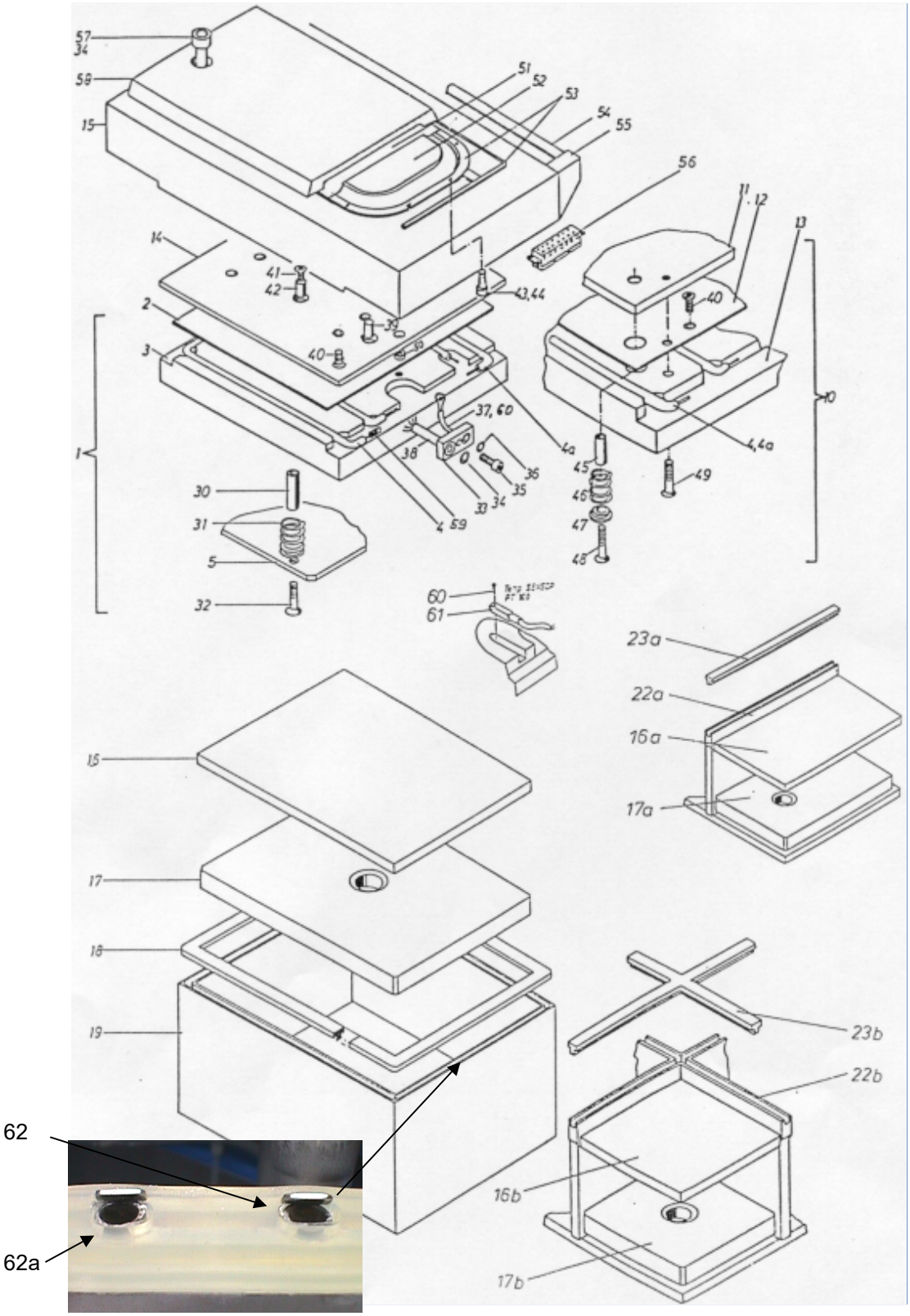
Baugruppe: **Vakuumstation UP / Vacuum station**